The Planning Inspectorate

Room: 3/22
Temple Quay House
2 The Square
Temple Quay
Bristol BS1 6PN

Direct Line: 0117-372-8827
Switchboard: 0117-372-8000
Fax No: 0117-372-8181
GTN: 1371-8827
teamp2@pins.gsi.gov.uk
http://www.planning-inspectorate.gov.uk

Mrs T Darke
Hinckley and Bosworth Borough Council
Planning Officer
Council Offices
Argents Mead
Hinckley
Leicestershire
LE10 1BZ

09 APR 2009

Your Ref: 08/00635/COU

Our Ref: APP/K2420/A/09/2097838/NWF
Further appeal references at foot of letter

Date: 8-April 2009

DEVELOPMENT SERVICES
9 APR 2009
RECEIVED

Dear Mrs Darke

Town and Country Planning Act 1990
Appeals by Mr Roy Borthwick
Site at Pinewood Lodge Holiday Village, Overton Road, Ibstock, LE67 6PD

I enclose both a statement and third party representations relating to the above appeals.

If you have any comments on the points raised, please send 2 copies to me no later than **23 April 2009**. You should comment solely on the representations enclosed with this letter.

You cannot introduce new material or put forward arguments that should have been included in your earlier statement. If you do, your comments will not be accepted and will be returned to you.

By the same date, please also send me the following information (preferably by email):

- A list of the witnesses that you intend to call, including those who may not submit a proof of evidence.
- An estimation of the time that you will need to present your case. This should be broken down into the following:
  - opening the case;
  - evidence-in-chief for each witness;
  - cross-examination of each witness; and
  - closing submission.

Using e-mail and the internet

INVESTOR IN PEOPLE
POSITIVE ABOUT DISABLED PEOPLE

You can now use the internet to send us documents and check the information and the progress of this case at (www.planningportal.gov.uk/pcs). If you send us your comments by e-mail, you only need to send us one copy of each. However, if you post your comments, please send us 2 copies of everything and put the full appeal reference number on each copy.

Comments submitted after the 9-week deadline will not be seen by the Inspector unless there are extraordinary circumstances for the late submission.

Yours sincerely

Jenny Howland

211AL(BPR)

Further appeal references:- APP/K2420/A/09/2097840 and APP/K2420/A/09/2097837

Hart, Elizabeth

From: Simon J Hill [SJHill@leics.gov.uk]
Sent: 02 April 2009 16:28
To: Team P2
Subject: FW: APP/K2420/A/09/2097838/NWF and APP/K2420/A/09/2097837/NWF Highway Authority Statements and Appendices
Attachments: APP-K2420-A-09-2097837-NWF Highway Authority Statement.doc; APP-K2420-A-09-2097838-NWF Highway Authority Appendices.pdf; APP-K2420-A-09-2097838-NWF Highway Authority Statement.doc; APP-K2420-A-09-2097837-NWF Highway Authority Appendices.pdf

-----Original Message-----
From: Simon J Hill
Sent: 02 April 2009 16:11
To: 'Planning Inspectorate (Hinckley & Bosworth) (team13.pinsaapep@pins.gsi.gov.uk)'
Cc: 'Louise Forman'
Subject: APP/K2420/A/09/2097838/NWF and APP/K2420/A/09/2097837/NWF Highway Authority Statements and Appendices

The Planning Inspectorate
Room 3/12a,
Temple Quay House,
2 The Square,
Temple Quay,
Bristol
BS1 6PN

Appeal References APP/K2420/A/09/2097838/NWF and APP/K2420/A/09/2097837/NWF Hinckley and Bosworth Borough Council Planning Application Numbers 08/00635/COU and 08/00627/FUL. Mr R. Borthwick. Pinewood, Overton Road, Ibstock, Leicestershire.

Dear Sir/Madam,

I should be grateful if you would accept the attached statement and appendices, which are presented on behalf of the Leicestershire County Council (Highway Authority), in connection with the appeals identified above.

Yours faithfully,

Simon Hill
Senior Technician
Highways Development Control,
Dept. H. T. & W. M.,
Leicestershire County Council,
County Hall,
Glenfield,
Leicester
LE3 8RJ

0116 3058202

<<APP-K2420-A-09-2097837-NWF Highway Authority Statement.doc>> <<APP-K2420-A-09-2097838-NWF Highway Authority

Appendices.pdf>> <<APP-K2420-A-09-2097838-NWF Highway Authority Statement.doc>> <<APP-K2420-A-09-2097837-NWF Highway Authority Appendices.pdf>>

Leicestershire County Council - rated a 'four-star' council by the Audit Commission

---

This e-mail and any files transmitted with it are confidential. If you are not the intended recipient, any reading, printing, storage, disclosure, copying or any other action taken in respect of this e-mail is prohibited and may be unlawful. If you are not the intended recipient, please notify the sender immediately by using the reply function and then permanently delete what you have received.

Incoming and outgoing e-mail messages are routinely monitored for compliance with Leicestershire County Council's policy on the use of electronic communications. The contents of e-mails may have to be disclosed to a request under the Data Protection Act 1998 and the Freedom of Information Act 2000.

The views expressed by the author may not necessarily reflect the views or policies of the Leicestershire County Council.

Attachments to e-mail messages may contain viruses that may damage your system. Whilst Leicestershire County Council has taken every reasonable precaution to minimise this risk, we cannot accept any liability for any damage which you sustain as a result of these factors. You are advised to carry out your own virus checks before opening any attachment.

This email was received from the INTERNET and scanned by the Government Secure Intranet anti-virus service supplied by Cable&Wireless in partnership with MessageLabs. (CCTM Certificate Number 2007/11/0032.) In case of problems, please call your organisation's IT Helpdesk.
Communications via the GSi may be automatically logged, monitored and/or recorded for legal purposes.

HINCKLEY AND BOSWORTH BOROUGH COUNCIL
TOWN AND COUNTRY PLANNING ACT 1990

A WRITTEN STATEMENT SUBMITTED BY S. J. HILL ON BEHALF OF THE HIGHWAY AUTHORITY (LEICESTERSHIRE COUNTY COUNCIL) IN CONNECTION WITH AN APPEAL MADE BY MR R. BORTHWICK IN RESPECT OF THE REFUSAL OF PLANNING PERMISSION BY THE NORTH WEST LEICESTERSHIRE DISTRICT COUNCIL TO ALLOW THE DEMOLITION OF THE EXISTING CONSERVATORY AND REBUILD TO PROVIDE A FAMILY DINING/BREAKFAST ROOM WITH BAR AREA, WC FACILITIES AND RECEPTION AREA TOGETHER WITH CHANGE OF USE OF PART GROUND FLOOR OF DWELLING TO PROVIDE A TEA ROOM/DINING AREA AND KITCHEN AT PINEWOOD, OVERTON ROAD, NAILSTONE, IBSTOCK.

Planning Ref: 08/00627/FUL D.O.E. Ref: APP/K2420/A/09/2097837/NWF

THE APPEAL SITE AND THE HIGHWAY

1. The site that is the subject of the appeal is located on the south-east side of Overton Road at a distance of approximately 23 metres from the highway boundary. On the basis of the submitted site location plans, the land within the blue boundary under the control of the Appellant has a frontage onto the street of approximately 63 metres.

2. Overton Road is an unrestricted (60mph) unclassified road between A447 Hinckley Road and High Street, Ibstock (C6109) which serves the Appellant's premises (Pinewood), 2 farms, fields under agriculture and, towards Ibstock, 7 dwellings. There are 2 existing accesses to the site from Overton Road. The junction of the south-western access to the site with Overton Road is situated at a distance of approximately 51 metres from the junction of Overton Road with a busy, fast section of a Class I road (A447). Where Overton Road meets A447 Hinckley Road, it forms a crossroads junction with Odstone Lane.

3. The carriageway of Overton Road is approximately 2.9 metres wide at the frontage of Pinewood. In the vicinity of the appeal site, there are no footways on Overton Road. The verge on the south-east (appeal site) side of Overton Road has an average width of approximately 2.0 metres to the base of a hedge. On the north-west side of Overton Road, the verge is on average approximately 2.1 metres wide to the base of a hedge.

4. In proximity to the Appellant's land and at its junction with Hinckley Road, Overton Road does not benefit from street lighting. Within Overton Road, there are appropriate centre of carriageway road markings from the junction with Hinckley Road to the point of the south-western access to the appeal site.

5. At the highway boundary, the existing north-eastern access to the site is approximately 6.7 metres wide. At a distance of approximately 5.7 metres back from the carriageway at the position of some gates, the access is approximately 3.9 metres wide. The access has kerbed radii of approximately 4.4 metres to the left hand side and 3.2 metres to the right hand side and is not surfaced with a hard bound material. The surfacing is loose stones/soil.

6. At the highway boundary, the existing south-western access to the site is approximately 4.0 metres wide and is surfaced with a bituminous material.

7. The available visibility out of the existing north-eastern access to the site is approximately 10 metres to the right hand side and approximately 36 metres to the left hand side from a set back distance of 2.4 metres.

8. The available visibility out of the existing south-western access to the site is approximately 23 metres to the right hand side and approximately 30 metres to the left hand side from a set back distance of 2.4 metres.

9. At the junction of Overton Road with A447 Hinckley Road, the horizontal and vertical alignment of the carriageway is such that the available visibility is approximately 115 metres to the right hand side from a set back distance of 2.4 metres. It would appear that visibility to the left hand side from a set back point of 2.4 metres at the centre of the access is appropriate (i.e. 215 metres). Forward visibility for a vehicle waiting to make a right turning manoeuvre from Hinckley Road onto Overton Road towards oncoming traffic is approximately 160 metres.

10. The existing lawful permitted use of the premises in planning terms is a residential dwelling with 9 tourist accommodation/holiday units permitted by 98/00764/COU.

11. Overton Road is predominantly straight at the frontage of the land under the control of the Appellant, but immediately to the north east it bends towards the north. The road gently rises from the junction with Hinckley Road.

12. It would appear that forward visibility for a right turning vehicle and for a car approaching a right turning vehicle from the south-west at both accesses is appropriate (i.e. 43 metres at the south-western access and 59 metres at the north-eastern access).

TRAFFIC

13. There is no up to date Leicestershire County Council survey data to identify the speed of traffic that uses Overton Road adjacent to the site. On the basis of several passes in a motor vehicle across the frontage of the appeal site it would be reasonable to suggest that at the point of the north-eastern access motorists would feel reasonably confident with speeds of 31 mph in a south-westbound direction and 26 mph in a north-eastbound direction. It would be reasonable to suggest that at the point of the south-western access, motorists would feel reasonably confident with speeds of 30 mph in a south-westbound direction and 24 mph in a north-eastbound direction.

14. There is no up to date Leicestershire County Council survey data to identify the speed of traffic that uses Hinckley Road (A447) adjacent to the junction with Overton Road. On the basis of several passes in a motor vehicle on Hinckley Road at the junction with Overton Road it would be reasonable to suggest that motorists would feel reasonably confident with speeds that are close to or even substantially greater than the speed limit (60mph).

15. There is no up to date Leicestershire County Council traffic count data to provide details of the number of vehicles using Overton Road.

16. A 12hr directional classified vehicle count carried out by Leicestershire County Council on A447 Hinckley Road, Ibstock at a point approximately 1.11 Km to the north of the A447 Hinckley Road, Overton Road and Odstone Lane crossroads junction on Tuesday 9th April 2002 revealed that there were 3553 northbound movements and 3503 southbound movements (total 7056) (appendix 1). The two way peak hour flows were in excess of 10% of the daily flow and as such it would be reasonable to suggest that the Hinckley Road (A447) should be regarded as a busy road.

17. Leicestershire County Council is to carry out a radar speed survey and a traffic count in respect of traffic on A447 Hinckley Road at the junction with Overton Road and Odstone Lane and will provide full details of the results on the day of the Public Inquiry.

ACCIDENTS

18. There have been no recorded personal injury accidents on Overton Road and at the crossroads junction of Overton Road with A447 Hinckley Road and Odstone Lane during last 5 full years plus the current year to date.

19. There have been 5 recorded personal injury accidents within 940 metres in either direction from the A447 Hinckley Road, Overton Road and Odstone Lane crossroads junction during the 5 years up to present date (appendix 2).

20. One accident occurred as a result of a driver failing to perceive slowing or stationary vehicles within the carriageway.

21. Taking into consideration the characteristics of the accidents it would be reasonable to suggest that a significant contributory factor was poor judgement while travelling at speed.

TRIP GENERATION

22. As described above, the existing lawful permitted use of the land under the control of the Appellant in planning terms is a residential dwelling with 9 tourist accommodation/holiday units.

23. The Leicestershire County Council is a license holder and has access to the TRICS (Trip Rate Information Computer System) Database. Information provided on this database suggests that on a weekday privately owned housing generates a mean of 6.83 trips per household.

24. It is likely that a holiday accommodation use, if fully occupied, could generate, per unit, approximately 1 trip in the morning due to an occupant departing the site and 1 trip later in the day as another occupant arrives, per day. Alternatively, if there is no change in occupancy, the occupants of a unit may leave the site by vehicle for a day trip, returning later in the same day. In both of these cases, a holiday accommodation use would generate 2 trips per day per unit.

25. Information on holiday accommodation uses provided on the TRICS database from the summer period when this use would be more likely to be fully occupied (surveys carried out during the months of May to September) confirms the above figures and suggests that on average, per unit, this use may generate 2.07 trips per day.

26. It would therefore be reasonable to suggest that the existing uses at the land under the control of the Appellant have the potential to generate 6.83 trips from the dwelling and 18 trips from the holiday units per day (total 24.83).

27. It is reasonable to suggest that the proposed dining/breakfast room with bar area and tea room/dining area will be available to the general public and would fall within the A3 Restaurants, snack bars and cafés use class. On the basis of the submitted plans, this use could have a total floor area of approximately 208.44 sq metres.

28. Information on restaurant uses provided on the TRICS database suggests that the proposed A3 Restaurants, snack bars and cafés use may generate 144.9 trips per day. On the basis of the submitted planning application, the proposal comprises a bar area. If the use of the proposal is to be an A4 Drinking establishments (pubs and bars) use, information provided on the TRICS database suggests that the proposal could generate 163.04 trips per day.

29. It must be noted that in the cases above the data has been obtained from sites that are larger than the appeal site. Whilst it should be used with caution, the data from TRICS is reasonably reliable and generally accepted as indicative of the potential for traffic generation at similar sites.

30. The appeal site is not at a sustainable location in proximity to built up areas, is not served by public transport links and is not easily accessible by walking. At this location, dependency on the motor vehicle will be increased and therefore the daily trip rate generated by the proposed development is likely to be higher.

31. Under the circumstances, it is reasonable to suggest that the proposed dining/breakfast room with bar area and tea room/dining area will lead to a significant increase in traffic that will visit the premises.

POLICY AND GUIDANCE

32. The Leicestershire County Council design policy guide "Highways, transportation and development" was drawn up by a working party comprising engineers from Leicestershire County Council. The working party consulted

widely with a range of public and private bodies, almost 3000 Leicestershire households, all other Leicestershire local authorities and the emergency services before presenting its proposals for approval.

33. The project team consulted with Government Office East Midlands (GOEM) regarding the content and status of "Highways, transportation and development". GOEM advice was that in view of changes in the planning legislation it would be appropriate to adopt the document as County Council Policy.

34. The current document was adopted as a policy document by Leicestershire County Council on 22/9/04. The document replaces the previous publication "Highway Requirements for Development". Since 22/9/04, it has been regularly reviewed to ensure that it remains relevant and up to date.

35. The document "Highways, transportation and development" reflects government policy and guidance, particularly PPS3, PPG13, and the most recent version, adopted by full Council in December 2007 and published in January 2008, has been prepared to take account of the Manual for Streets and the new Guidance on Transport Assessments. The guidance it contains reflects the evidence based work carried out to support the Manual for Streets. It is also supported by other local policies and strategies, including the Local Transport Plan, the County Council's walking and cycling strategies and its road safety plan.

36. The Leicestershire County Council document "Highways, transportation and development" can be accessed by the web at www.leics.gov.uk/htd.

37. In connection with previous appeals, Planning Inspectors have attached significant weight to the document and have accorded it supplementary planning guidance status.

38. The Leicestershire County Council's Highways Development Control policy is stated clearly in Section IN4 paragraphs 1.24 to 1.26 (appendix 4). It is reasonable to conclude from the policy statements that development should only be considered acceptable where access roads are suitable for the type of development and it must be safe for all road users, promote road safety and reduce personal safety risks whether real or imagined.

39. The policy regarding access to the road network is stated clearly in Section IN5 paragraphs 1.27 to 1.35 (appendix 4). The Highway Authority will expect that access layout will comply with appropriate design guidance and it will recommend refusal of any planning application that raises concern about highway safety.

40. Annex B of the March 2001 edition of Planning Policy Guidance Note (PPG13) provides guidance for the control of development with access to trunk roads. Furthermore specific clauses from Annex B state that:-
"Whatever the type of access, safety considerations will be paramount"
"Local Authorities should apply the same principles when formulating their policy on local roads".

41. The December 2001 edition of Government Circular "Control of Development Affecting Trunk Roads and Agreements with Developers" supersedes Circular Roads (CR) 4/88. In the light of the guidance identified in paragraph 40 above, the contents of this latest circular should be taken into consideration. Selected text from Part 1 (Access to all-purpose trunk roads) of the document refers to research into accidents and states that:-

> "Vehicles about to leave the main road are bound to slow down in relation to the higher traffic speed of those staying on the main road, while vehicles joining the main road will take time to match the speed of traffic already on it. Tail end collisions can take place in these circumstances. Safety issues also arise in the case of an access that provides for a right turning movement across the opposing traffic flow. There is then the added hazard of collision between a faster moving vehicle and one that is effectively stationary".

42. The principles contained in the Highways Agency Technical Directives TD9/93, TD 41/95 and TD42/95 and Department of Transport Advice Note TA 57/87 should also be taken into consideration when dealing with the control of development.

43. Department of Transport Advice Note TA 57/87, Roadside Features and more recently Highways Agency Advice Note TD 41/95, Vehicular Accesses To All Purpose Trunk Roads, cite the results of studies into accidents. TA 57/87, paragraph 9.3.1 states that: -

"In 1985 60% of all personal injury accidents on roads occurred at junctions of which 10736 (or 4.4%) were described as private drives or entrances".

44. TD 41/95 Annex 1, paragraphs A1.13 and A1.14 state:-

"There was a reduction in personal injury accidents in Great Britain between 1980 and 1992, the latest year for which figures are available. As indicated in paragraph 1.8, accidents associated with junctions and accesses have not fallen as fast as others. Although accidents at junctions and direct accesses have only fallen by 2% there has been a significant reduction in the severity with fatal and serious accidents falling by 36% in urban areas and by 11% and 32% respectively in rural areas. Slight accidents on the other hand increased by 4% in urban areas and soared by 49% in rural areas to just over 18000. Considering just those accidents reported as occurring at private drives or entrances (the least used of accesses), these have risen by 15% between 1980 and 1992. On rural roads, fatal accidents have increased by 28%, but serious accidents (considerably more), have fallen by 32%. Slight accidents have increased by 42% to 2319. Overall, on rural roads, personal injury accidents have increased by 16%".

45. TD 41/95 continues in paragraph 1.17 with respect to private drives and entrances and states:-

"It has to be recognised that conflicting traffic movements in and out of them are quite low and accidents are therefore sparsely distributed among numbers of lightly trafficked accesses, nonetheless they do constitute a very real risk".

46. In 1987 The Government published a report "Road Safety ---- The Next Steps" which set out targets to reduce road casualties by a third by the year 2000. More recent press notices announced further road casualty reductions by the year 2010.

47. Leicestershire County Council supports the Government objectives. This has resulted in the production of a policy document known as the "Road Safety Plan" where the Authority sets out its policy to reduce the number of road accident casualties in Leicestershire. It was intended that this would be

achieved by means of information, road improvements, education and training. Also involved is the development control function.

48. The hazards associated with accesses, as highlighted in the statistics mentioned above and the accident reduction targets published by The Government and the County Council support the guidance set out in the policy document "Highways, transportation and development".

OBSERVATIONS REGARDING THE APPEAL

49. In accordance with the details contained in "Highways, transportation and development", "unless the external road falls within the definition of a road (street) as set out in appendix L, you should normally design the site access to external roads in line with the appropriate parts of the Design Manual for Roads and Bridges and our Specification and standard drawings" (paragraph 3.9). Hinckley Road is a class I (A447) principal road and carries a considerable level of through traffic. It carries over 2000 vehicles per day [7056 (appendix 1)]. The average speed of traffic on Hinckley Road in proximity to the crossroads junction of A447 Hinckley Road, Overton Road and Odstone Lane is in excess of 30mph. For these reasons, it is considered that Hinckley Road does not represent a "street" in accordance with the "Manual for Streets" and therefore this guidance is not relevant for consideration of the junction of Overton Road with Hinckley Road. The guidance contained in "Highways, transportation and development" and the "Design Manual for Roads and Bridges" is considered to be relevant.

OBSERVATIONS REGARDING THE USE OF THE ACCESS TO THE SITE THAT IS THE SUBJECT OF THE APPEAL AND THE JUNCTION OF OVERTON ROAD AND HINCKLEY ROAD

50. On the basis of the design and access statement submitted as part of the planning application, "the existing main vehicular access into the site off from Overton Road will remain as the principle access into the site".

51. As a result of the proposal it is likely that there would be a significant increase in the use of the existing access onto Overton Road. Furthermore, there would be a significant increase in turning traffic at the junction of Overton Road with A447 Hinckley Road.

52. The objection to the proposed development relates to the increase of turning traffic onto and off Overton Road and at the junction of Overton Road and

A447 Hinckley Road. Any turning manoeuvre onto or off any road represents a potential hazard.

53. Appropriate visibility splays for an access onto a highway should be set out in accordance with the guidance contained in the Leicestershire County Council publication "Highways, transportation and development" (appendix 3).

54. With reference to the guidance identified in paragraphs 40-45 of this statement the visibility standards referred to above are supported by details contained in the Highways Agency technical directive TD41/95 Chapter 2 page 2/4 Clauses 2.21 and 2.22.

55. In accordance with the guidance contained in "Highways, transportation and development" (appendix 3), the appropriate visibility out of the existing north-eastern access should be approximately 59 metres to the right hand side and 43 metres to the left hand side from a set back distance of 2.4 metres.

56. Observation on site shows that the achievable visibility at the north-eastern access (i.e. 2.4 metres x 10 metres to the right hand side and 36 metres to the left hand side, see paragraph 7), would appear to be significantly less than the desirable standard.

57. The appropriate visibility for a junction with a major road where the speed limit is 60mph (100kph design speed) should be 2.4 metres x 215 metres. Taking into consideration the average speeds of vehicles on A447 Hinckley Road the desirable visibility at the junction of Overton Road with A447 Hinckley Road should be at least 215 metres.

58. Observation on site shows that the achievable visibility to the right hand side (i.e. 2.4 metres x 115 metres, see paragraph 9) would appear to be significantly less than the desirable standard. Furthermore, forward visibility for a vehicle turning right from Hinckley Road onto Overton Road (i.e. 160 metres, see paragraph 9) would also appear to be significantly less than the desirable standard.

59. The proposal will lead to a significant increase in turning traffic using an access that is substandard in width and will lead to additional dangers to road users.

60. On the basis of the guidance contained in Highways transportation and development, the minimum width for a shared private drive serving between 2 and 5 dwellings is 4.25 metres (appendix 4). The minimum width for a shared private drive serving between 6 and 25 dwellings is 4.8 metres. Margins of 0.5 metres are required if the access is bounded by a wall, fence or other solid obstruction on one side, and of 1m if bounded on both sides. As the north-eastern access is bounded on both sides, it should have a minimum width of

not less than 5.8 metres. On the basis of measurements on site, the north-eastern access has a width of 3.9 metres at a distance of 5.7 metres from the carriageway boundary and is therefore substandard.

61. The width of the existing private access is less than the recommended minimum dimensions for a driveway to cater for two way traffic.

62. If two vehicles are unable to pass each other within the access, this will lead to vehicle reversing manoeuvres onto the main carriageway of Overton Road, leading to dangers to road users.

63. In addition, the substandard width of the access will lead to vehicles waiting in the highway to enter the site, also leading to dangers to road users.

64. Taking into consideration the potential for traffic generation at the access and the nature of Overton Road, the radii at the junction of the access to the proposal are substandard. No evidence has been put forward as part of the application to demonstrate by tracking how an access with appropriate width and geometry to enable 2 vehicles to pass one another at the access will be provided.

65. The development, if allowed, would set a precedent for further development served by accesses that are substandard in width, geometry and visibility. Future applications would then prove difficult to resist, to the detriment of highway safety.

66. In "Manual for Streets" (p79, 7.2.3) it is suggested that "carriageways may be narrowed over short lengths to a single lane as a traffic-calming feature". "In particular circumstances" carriageway widths "may be reduced to a minimum value of 2.75 m, which will still allow for occasional large vehicles". Carriageway "widths between 2.75 m and 3.25 m should be avoided in most cases, since they could result in drivers trying to squeeze past cyclists".

67. The minimum width of the carriageway of Overton Road in proximity to the development site (2.9 metres, paragraph 3 above) is therefore less than the recommended standard to cater for two-way traffic and less than the minimum width for a single-track system suggested by "Manual for Streets".

68. The proposal would be likely to lead to a significant increase in traffic using Overton Road to the south-west of the existing main vehicular access into the site and could therefore lead to an increase in conflict between vehicular traffic and pedestrians and cyclists and an increase in dangers to road users.

69. Damage to the highway verges caused by vehicles pulling onto them in order to pass each other may lead to maintenance issues and put additional pressures on the Highway Authority and the public purse.

70. The introduction or intensification in use of a junction or access onto a highway away from the built up limits, where there is no street lighting would be a source of danger to road users. The danger is not only dependant upon the speed and/or volume of the traffic on the road, but whether drivers travelling along the road would be expecting/anticipating such turning movements to take place.

OBSERVATIONS ON THE GROUNDS OF THE APPEAL

71. "In respect of the highway reasons for refusal, the Highway Authority's concerns can easily be resolved with works to the site's access and with works to and in the vicinity of the Overton Road/A447 junction which would have the effect of significantly improving sight lines. The Appellant will enter into a section 106 undertaking to carry out the work to the satisfaction of the local highway authority. In any event, it is not anticipated that any significant increase in traffic would be generated, particularly having regard to the fact that the proposed tea room is intended to cater for cyclists and walkers and to the fact that the appellant would undertake not to advertise the facility on the A447."

No information has been provided as part of the appeal to demonstrate how an appropriate access to the development site will be provided. Furthermore, the horizontal and vertical alignment at the junction of Overton Road with A447 is such that visibility is restricted.

As described above, the proposal would be likely to lead to a significant increase in traffic at the premises.

CONCLUSION

The proposal, if permitted could result in an unacceptable increase in traffic using the sites vehicular access and the Overton Road / A447 junction which lacks appropriate visibility for the speed of traffic on the main road which could lead to increased dangers for road users.

The proposal, if permitted could result in an unacceptable increase in traffic using an access which has inadequate width and geometry. That could in turn lead to vehicles reversing onto or off the Highway to the detriment of road safety.

In respect of refusal of planning permission by the Local Planning Authority, the Inspector is requested to dismiss the appeal.

CEng Ref: - 2008/0627/04/Overton Road, Ibstock/Appeal

SUGGESTED CONDITIONS

The following conditions are suggested in the event that the Inspector is mindful to allow the Appeal but the suggestions should not be interpreted as an indication that the development is acceptable in highway terms and should not be taken into consideration in the determination of the Appeal.

Before first use of the development hereby permitted, the existing gates to the vehicular access to serve the proposal shall be removed. Any new vehicular access gates, barriers, bollards, chains or other such obstructions erected shall be set back a minimum distance of 7 metres behind the Highway boundary and shall be hung so as to open inwards only.
Reason: To enable a vehicle to stand clear of the highway whilst the gates are opened/closed and protect the free and safe passage of traffic, including pedestrians, in the public highway.

Before first use of the development hereby permitted, drainage shall be provided within the site such that surface water does not drain into the Public Highway and thereafter shall be so maintained.
Reason: To reduce the possibility of surface water from the site being deposited in the highway causing dangers to road users.

Before first occupation of the development hereby permitted, turning facilities shall be provided within the site in order to allow vehicles to enter and leave in a forward direction. The turning area so provided shall not be obstructed and shall be available for use at all times.
Reason: To enable vehicles to enter and leave the site in a forward direction in the interests of the safety of road users.

The proposed development shall always remain ancillary to the existing use of the site and shall not be sold, leased nor otherwise disposed of separately from, the remainder of the premises.
Reason: Although the vehicular access is adequate to cater for traffic generated by the use of the premises, it is inadequate to cater for additional traffic that sub-division of the site could bring about.

Before first use of the development hereby permitted, the vehicular access to serve the proposal shall be provided with not less than 6 metre control radii on both sides of the access.
Reason: To enable vehicles to enter and leave the highway in a slow and controlled manner and in the interests of general highway safety and to afford

easy access to the site and protect the free and safe passage of traffic in the public highway.

Before first use of the development hereby permitted the access drive and any turning space shall be surfaced with tarmacadam, concrete or similar hard bound material (not loose aggregate) for a distance of at least 7 metres behind the Highway boundary and shall be so maintained at all times.
Reason: To reduce the possibility of deleterious material being deposited in the highway (loose stones etc.)

Before first use of the development hereby permitted, visibility splays of not less than 59 metres to the right hand side and 43 metres to the left hand side from a set back distance of 2.4 metres metres shall be provided at the junction of the access to serve the proposal with Overton Road. These shall be in accordance with the standards contained in the current County Council design guide and shall be so maintained in perpetuity. Nothing shall be allowed to grow above a height of 0.9 metres above ground level within the visibility splays.
Reason: To afford adequate visibility at the access/junction to cater for the expected volume of traffic joining the existing highway network and in the interests of general highway safety.

Before first use of the development hereby permitted, the vehicular access to serve the proposal shall be widened to an effective minimum width of 4.8 metres over a distance of at least 7 metres behind the Highway boundary. The access drive once widened shall be so maintained at all times.
NOTE: If the access is bounded immediately on one side by a wall, fence or other structure, an additional 0.5 metre strip will be required on that side. If it is so bounded on both sides, additional 0.5 metre strips will be required on both sides.
Reason: To ensure that vehicles entering and leaving the site may pass each other clear of the highway and not cause problems or dangers within the highway.

Apart from via the main improved access to serve the proposal, there shall be no form of access of any type from the proposal directly onto Overton Road.
Reason: To ensure that there will be no intensification in use of a substandard access in the interests of Highway safety.

Before the development hereby permitted is first used, off-street car parking provision shall be made within the application site on the basis of 41 spaces for the benefit of the proposal. The parking area shall be surfaced, marked out prior to the development being brought into use and shall be so maintained at all times.
Reason: To ensure that adequate off-street parking provision is made to reduce the possibilities of the proposed development leading to on-street parking problems in the area.

The use of the proposal shall be restricted to an A3 Restaurants, snack bars and cafes use only no A5, or A4 uses should be permitted.
Reason: Although traffic and parking levels likely to be generated by the applicants specific proposal is acceptable in Highway safety terms, a more intensive use of the premises by another user may be inappropriate and create dangers due to increased traffic and parking in the vicinity of the site or on the local road network.

Appendix 1

Extract from Leicestershire County Council guidance document "Highways, transportation and development"

Visibility splays

3.23 Table DG4 sets out visibility splays required for junctions, bends and at vertical crests. For proposed internal development roads, you should normally base visibility splay on an assessment of likely 85th% ile vehicle speeds. For existing roads, you should base it on measured vehicle speeds. We will normally require you to carry out radar surveys to measure existing speeds and establish the 85th% ile.

3.24 While taking into account the design speeds in Tables DG1 and DG2, we will assess visibility requirements based on likely vehicle speeds within a proposed development. Where we are satisfied that speeds are, in practice, likely to be lower than the design speeds, we will normally be prepared to consider correspondingly shorter splays. The reverse is also true - if speeds are likely to be higher, the splays will need to be correspondingly greater in length.

Table DG4: Visibility splays

Assessed likely vehicle 85th %ile vehicle speed (mph)	Measured 85th % ile vehicle speed (mph)	Visibility distance at junctions, bends and vertical crests (m)[a]
15	11 to 15	17 [c]
20	16 to20	25 [c]
Speeds on new residential development roads should normally be controlled to 20mph or less[b]	21 to 25	33 [c]
	26 to 30	43 [c]
	31 to 37	59 [c]
	38 to 44	120 [d]
	45 to 53	160 [d]
	54 to 62	215 [d]
	63 to 75	295 [d]

(a) See Figure DG1 below for guidance on constructing splays.

(b) Where speed is assessed to be over 20mph, splay provision will normally be based on the appropriate 'measured 85th %ile vehicle speed' distance.

(c) Based on Manual for Streets, 'adjusted for bonnet length' d

(d) Based on Design Manual for Roads and Bridges.

Figure DG2 Construction of visibility splays

(For all horizontal visibility splays, where a footway, cycleway or similar is provided, the rear of the footway and so on should coincide with (match) the rear edge of the visibility splay.)

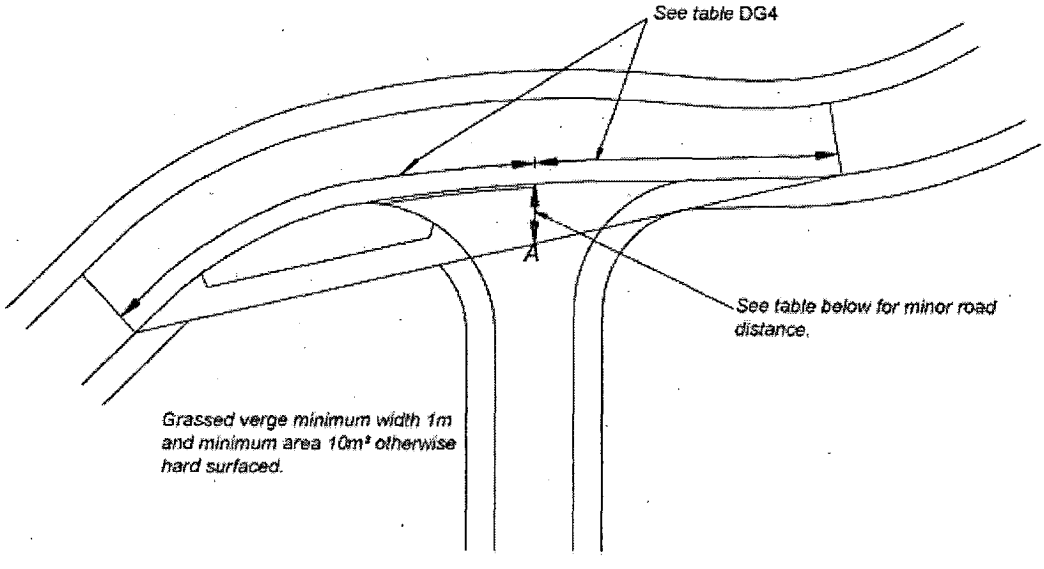

Copyright © 2007 Leicestershire County Council

Appendix 2

Extract from Leicestershire County Council guidance document "Highways, transportation and development"

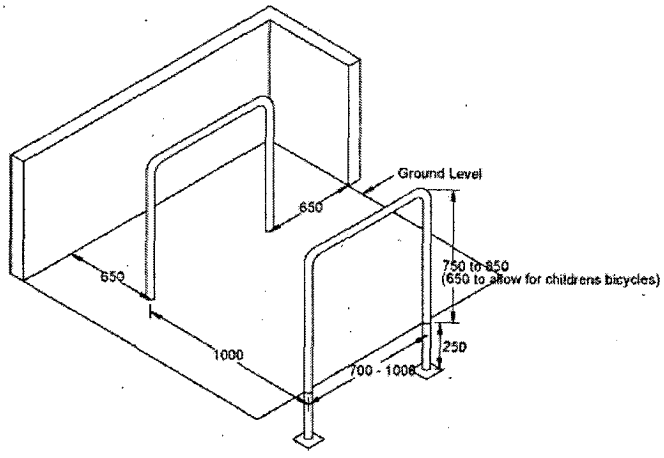

Figure DG19 Sheffield stand - inset 'toast rack' type. Sheffield stands can accommodate two cycles provided that stands are placed 1m apart and at least 500mm from any wall.

3.200 Parking provision should be considered in relation to any travel plan associated with a development proposal. Please refer to Section DG17.

3.201 Please refer to Traffic Advisory Leaflet 5/02 for further information on cycle parking.

Section DG17: Considering parking provision together with transport assessments and travel plans

3.202 You should not consider vehicle, motor cycle or cycle parking provision in isolation from travel plans. The level and design of on-site parking and any proposed travel plan measures should reflect and complement each other. The County Council is currently developing its own guidance on preparing travel plans. In the meantime, you can find some interim guidance in the Transport Assessment Guidelines in Part 7, appendix C.

3.203 For employment developments and other developments where travel plans are required, we will normally expect the development to include complementary facilities for motorcyclist and cyclists, for example, secure lockers (for storing clothes, and so on), showers and changing rooms.

Section DG18: Residential developments served by private drives and areas

3.204 This section provides design guidance on private drives and areas. For guidance on the Advance Payments Code (APC), please see Part 5, Section ANR2.

Principles

3.205 For developments of more than five dwellings, we will encourage developers to create, whenever possible, 'road' layouts that are to an adoptable standard and that will be offered for adoption. We will not normally adopt developments of five or less dwellings.

3.206 For developments of six or more dwellings, you should remember the implications both for yourself and house purchasers if we do not adopt the roads, for example:

- future maintenance liabilities;

Copyright © 2007 Leicestershire County Council

- public liabilities
- street cleansing;
- lack of specific pedestrian facilities;
- lack of or poor standard of lighting, drainage and so on;
- we have no powers under the Highways Act; and
- the police have no powers to remove obstructions.

Poorly-maintained private areas can also detract from the quality and appearance of a development.

3.207 Private developments should normally be in the form of a cul-de-sac. You should try to avoid private 'through' routes as they are more likely to be used by the general public, possibly adding to the liabilities and future problems for residents.

3.208 For private developments of six dwellings or more, we will normally serve a notice on you with an assessment of the cost of the proposed roadworks under the Advance Payments Code (APC), to protect frontagers' interests. The cost of this will reflect the cost of the proposed street works and you should construct the works to an appropriate standard. However, because APCs have been served and money has been paid or retained, we are not indicating any future intention to adopt and maintain the street works at public expense. Please see Part 5, Section ANR2 for more information.

3.209 If you clearly indicate that the development roads are to be private, we may also require:

- you to deposit a map with us under Section 31 (6) of the Highways Act 1980 identifying the roads which are to remain private (and any to be adopted too as appropriate);
- you to erect road signs indicating that the roads are unadopted and to maintain the signs for as long as the roads remain unadopted, all at your expense;
- evidence that you have made clear to potential purchasers of the dwellings on unadopted roads what the status of the road will mean to them in practice;
- evidence that you have secured future maintenance of the roads, for example, a unilateral undertaking by you under Section 106 of the Town and Country Planning Act to set up a maintenance company;
- you to indemnify us against future petitioning by residents to adopt their road under Section 37 of the Highways Act 1980, where the road joins together two adopted highways*; and
- the boundary between the private road and the publicly-maintained highway to be clearly marked by a concrete edging, boundary posts or similar.

*Note: The indemnity should normally be a legal covenant placed on the properties to prevent petitioning. We must approve the wording of the covenant.

General geometry for site access to the external road network

Copyright © 2007 Leicestershire County Council

3.210 **Note:** In all cases, the proposed development and its location must be acceptable to us in principle and highway safety must not be reduced.

On roads with a speed limit of 40mph speed limit or higher, or where vehicle speeds are more than 40 mph:

we will encourage a development to be served by a road with an adoptable layout and access designed in line with the appropriate section of the Design Manual for Roads and Bridges [glossary link]; or

where we accept that there is good reason why an adoptable layout cannot be achieved, the private drive and site access must be purpose-designed to a standard acceptable to us.

For all roads where the speed limit or recorded vehicle speeds is less than 40mph, even where you can demonstrate that you cannot achieve any form of adoptable layout or you do not want your development roads to be adopted (despite the implications in paragraph 3.206 above), you must still design the site access point to make sure that it does not affect the safety and efficient functioning of the highway or otherwise affect road users. (It will normally need to be designed in accordance with the Design Manual for Roads and Bridges or other standard acceptable to us.) Please see appendix E for more information.

3.211 You should provide the site access point in line with either Figure DG20 or Figure DG21, depending on the scale of the development. The access will only be acceptable if you have a maintenance agreement planned or in place.

Copyright © 2007 Leicestershire County Council

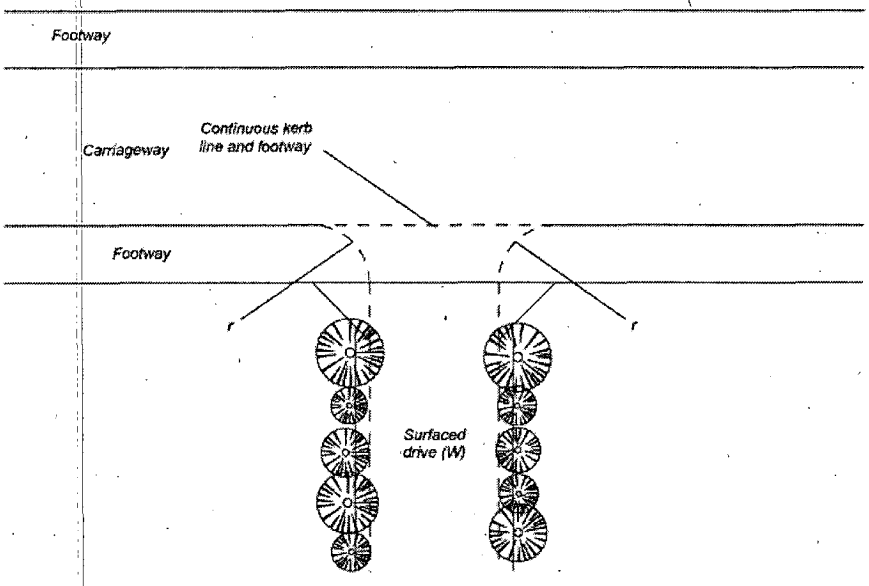

Minimum effective width (w)	Single dwelling = 2.75m Two to five dwellings = 4.25m for a minimum distance of 5m behind the highway boundary. Six to 25 dwellings = 4.8m for a minimum distance of 5m behind the highway boundary[(a)]. (In all cases add 0.5m if bounded by a wall, fence, hedge, line of trees or other similar obstruction on one side, 1m if bounded on both sides. See also paragraph 3.215 about access for refuse collection and 3.216 about access for emergency vehicles.)
Minimum control radii (r)	Single dwelling = 2m Two to five dwellings = 4m and six to 25 dwellings = 6m on a classified road ('A', 'B' or other classification), otherwise 2m
Vehicle visibility splays	As in Table DG4, measured from a set back of 2.4m or 2m where the speed limit (or measured vehicle speeds) is 30mph or less.
Pedestrian visibility splays	2m by 2m both sides (no planting permitted)
Gradient	Preferably not greater than 1:20 for first 5m, and should never exceed 1:12m
Surfacing	Bound material, for example, bituminous or concrete, or block paving for at least the first 5m

[(a)] If the driveway length is more than 25m, its minimum width should be 5m (plus any widening where bounded by walls) to enable access by refuse vehicles

Figure DG20 Unadopted shared drive serving up to 25 dwellings

Copyright © 2007 Leicestershire County Council

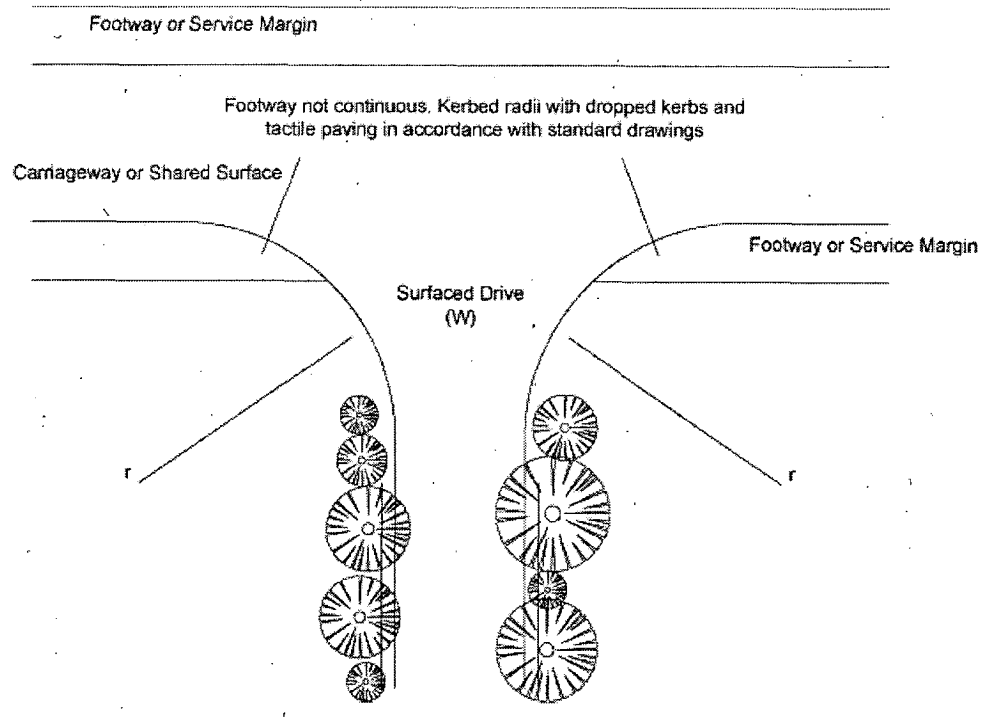

	Access serving more than 25 dwellings
Minimum effective width (w)	5.5m
	Add 0.5m if bounded by a wall on one side, 1m if bounded on both sides. See also paragraph 3.215 about access for refuse collection and 3.216 about access for emergency vehicles
Minimum kerbed radii (r)	6m
Vehicle visibility splays	As in Table DG4, measured from a set back of 2.4m
Pedestrian visibility splays	2m by 2m both sides
Gradient	Preferably not greater than 1:20 for the first 5m, and should never exceed 1:12
Surfacing	Bound material, for example, bituminous or concrete, or block paving for at least the first 5m

Figure DG21 Unadopted shared drive serving more than 25 dwellings

3.212 On busy roads (generally with peak-hour traffic flows of more than 300 vehicles an hour), any gates should be set back at least 5m from the highway boundary and should open inwards only.

3.213 If you cannot achieve layouts to Figure DG20 and Figure DG21, we may recommend refusal of your proposals on grounds of safety or dangers to the public, as appropriate.

General layout of a private residential development

3.214 Even if a road is not to be adopted, you should still seek to make sure that:

- your layouts are safe (both in terms of road safety and personal safety);
- your layouts are accessible to all likely users, including those with mobility impairments; and

Copyright © 2007 Leicestershire County Council

DEVELOPMENT SERVICES
9 APR 2009
RECEIVED

APPEALS BY

MR ROY BORTHWICK

SITE AT PINEWOOD LODGE HOLIDAY VILLAGE

OVERTON ROAD, IBSTOCK

LE67 6PD

RULE 6 STATEMENT OF CASE

ON BEHALF OF THE APPELLANT

31 MARCH 2009

PINS REF:
APP/K2420/A/09/2097838/NWF;
APP/K2420/A/09/2097840; and
APP/K2420/A/09/2097837

LPA REFS:
08/00627/FUL; 08/00635/COU; and
08/00636/COU

RULE 6 STATEMENT OF CASE

1. These appeals are made by Mr Roy Borthwick against the decision of Hinckley and Bosworth Borough Council to refuse planning permission for the following development:

a). Demolition of the existing conservatory and rebuild to provide a family dining/breakfast room with bar area, w.c. facilities and reception area together with change of use of part ground floor of dwelling to provide a tea-room/dining area and kitchen (LPA ref: 08/000627/FUL);

b). Change of use of part of garage to provide two holiday chalets and manager's accommodation (LPA ref: 08/00635/COU); and

c). Retention of building and use to provide a staff room and shower facilities (LPA ref: 08/00636/COU).

2. The application under reference 08/00627/FUL was refused on 29 August 2008 for the following reasons:

1. *The proposal, if permitted could result in an unacceptable increase in traffic using the sites vehicular access and the Overton Road/A447 junction which lacks appropriate visibility for the speed of traffic on the main road which could lead to increased dangers for road users, it is therefore contrary to policy T5 of the adopted Hinckley and Bosworth Local Plan and the guidance contained within Leicestershire County Council's highway design guidance "Highways, Transportation and Development".*

2. *The proposal, if permitted, could result in an unacceptable increase in traffic using an access which has inadequate width*

and geometry. That could in turn lead to vehicles reversing onto or off the Highway to the detriment of road safety, it is therefore contrary to policy T5 of the adopted Hinckley and Bosworth Local Plan and the guidance contained within Leicestershire County Council's highway design guidance "Highways, Transportation and Development".

3. *The proposed development is excessive in size and scale and if permitted, would be inappropriate and incongruous element which would have a detrimental effect on the existing dwelling, the site and the open countryside, it is therefore not in accordance with policy BE1 and NE5 of the adopted Hinckley and Bosworth Local Plan.*

4. *The proposed development, by virtue of the proposed use would be an unwarranted and unacceptable development harming the character and appearance of the countryside and has the potential to cause additional noise and disturbance to neighbouring properties, this would be contrary to policies BE1 and NE5 of the adopted Hinckley and Bosworth Local Plan.*

3. The application under reference 08/00635/COU was refused on 29 August 2008 for the following reasons:

1. *The proposal if permitted, could result in an unacceptable increase in traffic using an access, which lacks appropriate visibility for the speed of traffic on the lane, which could lead to increased dangers to road safety. Furthermore, the proposal if permitted could result in an unacceptable increase in traffic using an access, which has inadequate width and geometry, that could lead to vehicles reversing on to or off the highway to the detriment of road safety. To permit the proposal would*

therefore not be in accordance with policy T5 of the adopted Hinckley and Bosworth Local Plan and the guidance contained within Leicestershire County Council's highway design guidance, "Highways, Transportation and Development".

2. *The use of the part of the building as manager's accommodation is tantamount to a new dwelling capable of being occupied independently to the main dwelling, in the open countryside which would form an unwarranted and unacceptable development harming the character and appearance of the rural landscape, this would be contrary to policy NE5 of the adopted Hinckley and Bosworth Local Plan.*

3. *The use of part of the building as manager's accommodation and the change of use of part of the building into two chalet units forms an unwarranted and unacceptable development harming the character and appearance of the countryside and has the potential to cause additional noise and disturbance to neighbouring properties, this would be contrary to policies BE1 and NE5 of the adopted Hinckley and Bosworth Local Plan.*

4. The application under reference 08/00636/COU was refused on 29 August 2008 for the following reasons:

1. *The cumulative effect of this proposal which involves the change of use of an unauthorised building, together with other development on site is considered to be inappropriate and unjustified in this countryside location, it is therefore contrary to policies BE1 and NE5 in the adopted Hinckley and Bosworth Local Plan.*

2. *The proposed use of the development has the potential to cause noise and disturbance to neighbouring properties to the site which does not accord with policies BE1 of the adopted Hinckley and Bosworth Local Plan".*

5. The development plan comprises the East Midlands Regional Plan and the saved policies of the Hinckley & Bosworth Local Plan. The reasons for refusal do not refer to any conflict with the RSS.

6. At the forthcoming Public Inquiry reference will be made to the history of Pinewood Lodge Holiday Village and the various permissions which have been granted for development there. It will be shown that the Council has come to the view that the location is suitable for tourist development and permissions have been granted under the development plan policies contained within the adopted Local Plan.

7. In the Statement of Common Ground the appellant will seek to agree a description of the site and surrounding area with the LPA.

8. The Statement of Common Ground will set out relevant development plan and national planning guidance to the development.

9. The Statement of Common Ground will list relevant drawings to be considered in regard to each of the proposals.

10. The appellant identifies the following issues:

(i) Highways and Traffic

11. The Local Highway Authority identified certain concerns in its response to consultation. Those concerns are reflected in the grounds of refusal. It is proposed to discuss with the Highway Authority what works are

required in order to address its concerns and to incorporate those works into a section 106 Unilateral Planning obligation to present to the Inquiry.

12. In any event, it is not anticipated that any significant increase in traffic would be generated by the proposals, particularly having regard to the fact that the proposed tea room is intended to cater for cyclists and walkers and to the fact that the appellant would undertake not to advertise the facility on the A447.

(ii) Effect on existing dwelling, the site and the open countryside

13. The site is fairly level apart from the lake area where the ground has been built up to the north. There are numerous mature trees around the perimeter of the site which offer a visually attractive setting for the development. All boundaries have mature dense planting providing excellent screening.

14. An analysis of the character and appearance of Pinewood Lodge and the existing complex of buildings of which the appeal site forms part demonstrates that the design, form, scale and location of the proposed development would be in keeping with the group of buildings of which it would be part.

15. As to the proposed change of use to provide a manager's accommodation, there is a need for an on-site manager to be present at all times. The change of use of an existing building could not result in any harm to the character or appearance of the countryside.

16. It is proposed to carry out further landscaping, including reinstatement of hedgerows, planting native woodland tree species and introducing additional reed and marginal planting to the lake shallows to improve

biodiversity. Such landscaping would ensure that the proposals were compliant with Local Plan Policy NE10 and with the National Forest Strategy. The landscape proposals have been designed to respect the local character of the area.

17. The proposals would have no adverse effect on the open countryside.

(iii) Noise and Disturbance

18. There are a small number of dwellings surrounding the site:

1. Belchers Cottage to the south located approximately 80m from the proposed kitchen facilities and bar area.
2. The Larches to the west located approximately 100m from the proposed kitchen facilities and bar area.
3. Dwellings on Grange Lane to the south-east, with the closest dwelling located approximately 150m from the proposed kitchen facilities and bar area.

Noise monitoring indicates that existing noise levels at those properties are principally influenced by road traffic on A447.

19. The operation of the proposed bar has potential to generate noise at the surrounding properties through the occasional use of the audio system in the bar and the proposed kitchen extraction system. With the existing conservatory, monitoring indicated that music was only just audible at the boundary of the nearest noise sensitive property. The proposed new construction would be considerably more substantial than the existing building and calculations indicate that there would consequently be a substantial attenuation in noise levels, thus ensuring that there would be no noise disturbance even with the occasional playing of music. So far as the kitchen extractor system is concerned,

noise levels will be controlled by an appropriate condition limiting any noise at the nearest façade of the nearest NSP to 35 dB $L_{Aeq,\ 1\ hour}$.

20. In relation to the remainder of the proposals, no new sources of noise are identified which would give rise to any increases in noise levels at the surrounding properties.

21. The cumulative effect of the development would cause no additional noise or disturbance to neighbouring properties given the site's relationship with surrounding properties and the existing boundary features.

(iv) Tourism

22. The reason why the additional tourist accommodation is being sought will be explained. There is very limited tourist accommodation within a reasonable distance of the site and, in order to meet the need of accommodation to serve visitors to Ibstock and the surrounding area, the provision of additional accommodation on site is justified. Moreover, the proposed accommodation would not directly compete with other accommodation in the Borough and will safeguard existing jobs as well as creating new employment opportunities.

23. The proposed development will enhance the tourist offer in the local area. It is supported by existing tourist initiatives and organisations operating in the area. It is appropriate and complimentary to the existing tourist facilities on the site and is entirely compatible with the countryside and the National Forest.

Documents which the appellant may refer to at the Inquiry

1. National planning guidance in Planning Policy Statements;
2. Good Practice Guide on Planning for Tourism;
3. Government Circulars;
4. East Midlands Regional Plan (March 2009);
5. Regional Economic Strategy for the East Midlands 2006-2020;
6. The 'saved' policies in the Hinckley and Bosworth Local Plan;
7. Supplementary Planning Guidance Note 1G "National Forest";
8. Leicestershire County Council's Highway Design Guidance "Highways, transportation and Development".
9. Relevant planning decisions at Pinewood Lodge;
10. Hinckley & Bosworth Promotions Annual Report 07/08;
11. Leicestershire Promotions Annual Report 2007/08;
12. Regional Tourism Strategy (October 2003);

We reserve the right to refer to any other documents which may become relevant during the consideration of appeal.