1V00695/FUL DISCONS

Do not scale. Use only written dimensions. Contractors must verify all dimensions before starting work and any discrepancies to be reported to Paul Cleaver, Architect
© This drawing including the design and technical information contained in it remains the copyright of Paul Cleaver, Architect

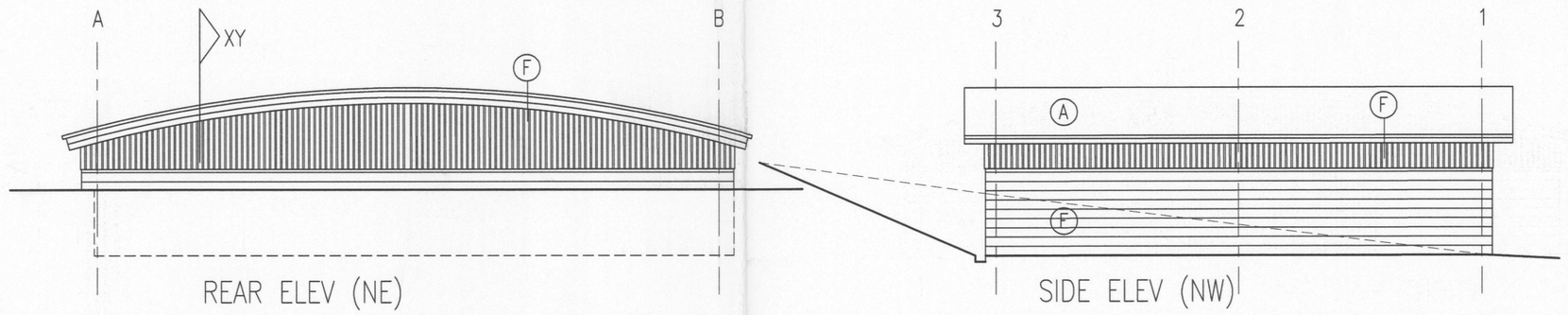

REAR ELEV (NE)

SIDE ELEV (NW)

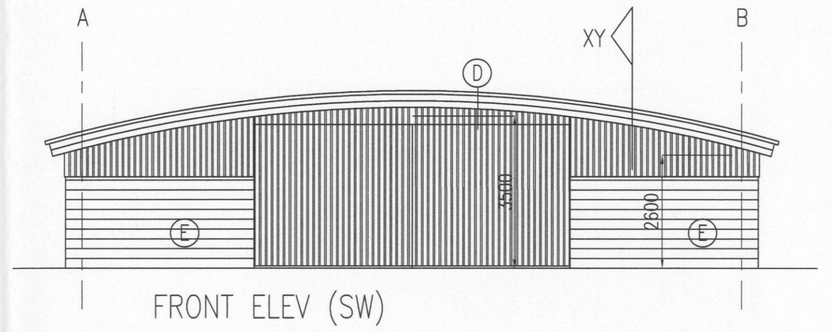

FRONT ELEV (SW)

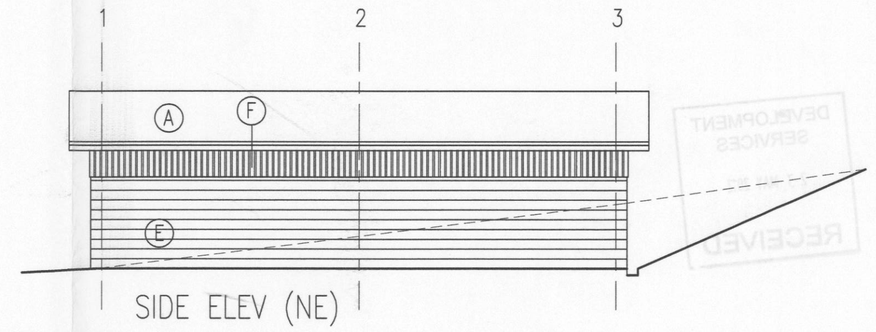

SIDE ELEV (NE)

- (A) Profiled steel roof sheeting (Green)
- (B) Curved 'I' section beam (30m dia)
- (C) 457 x 191 portal stanchion
- (D) Sliding door with vertical boarding
- (E) Facing blockwork with retaining wall inner skin (150mm(
- (F) Vertical boarding with 35mm gaps
- (G) Drainage channel
- (H) Earth retention system
- (I) Diagonal steel bracing

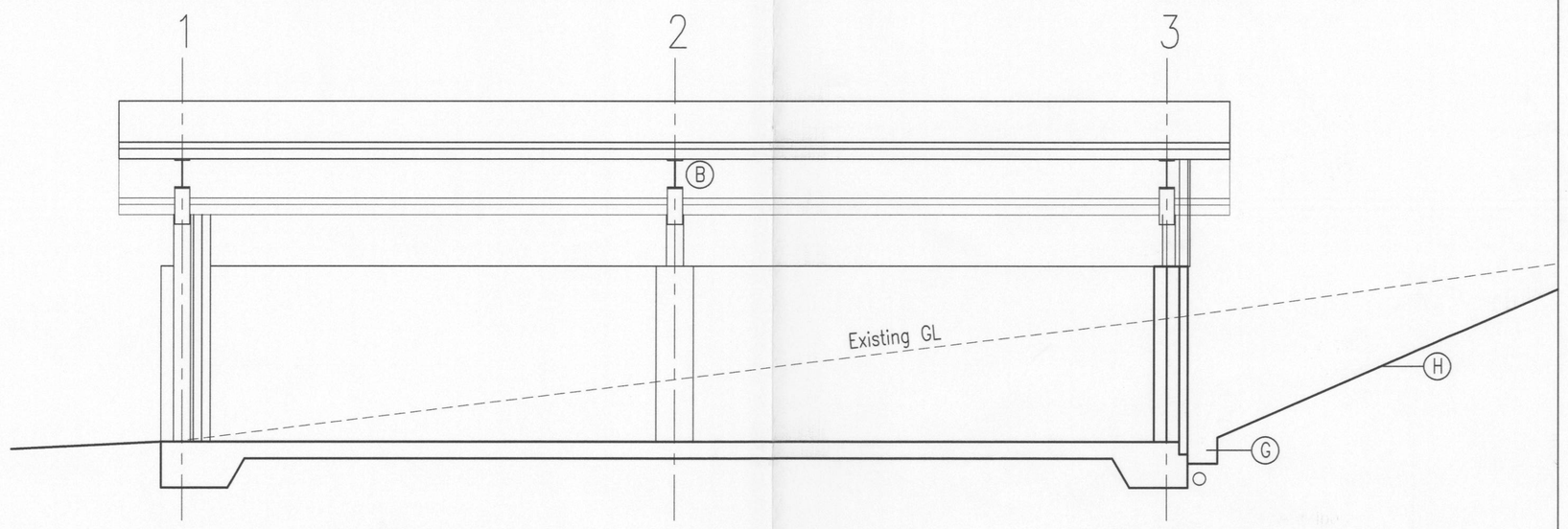

SECTION X/Y

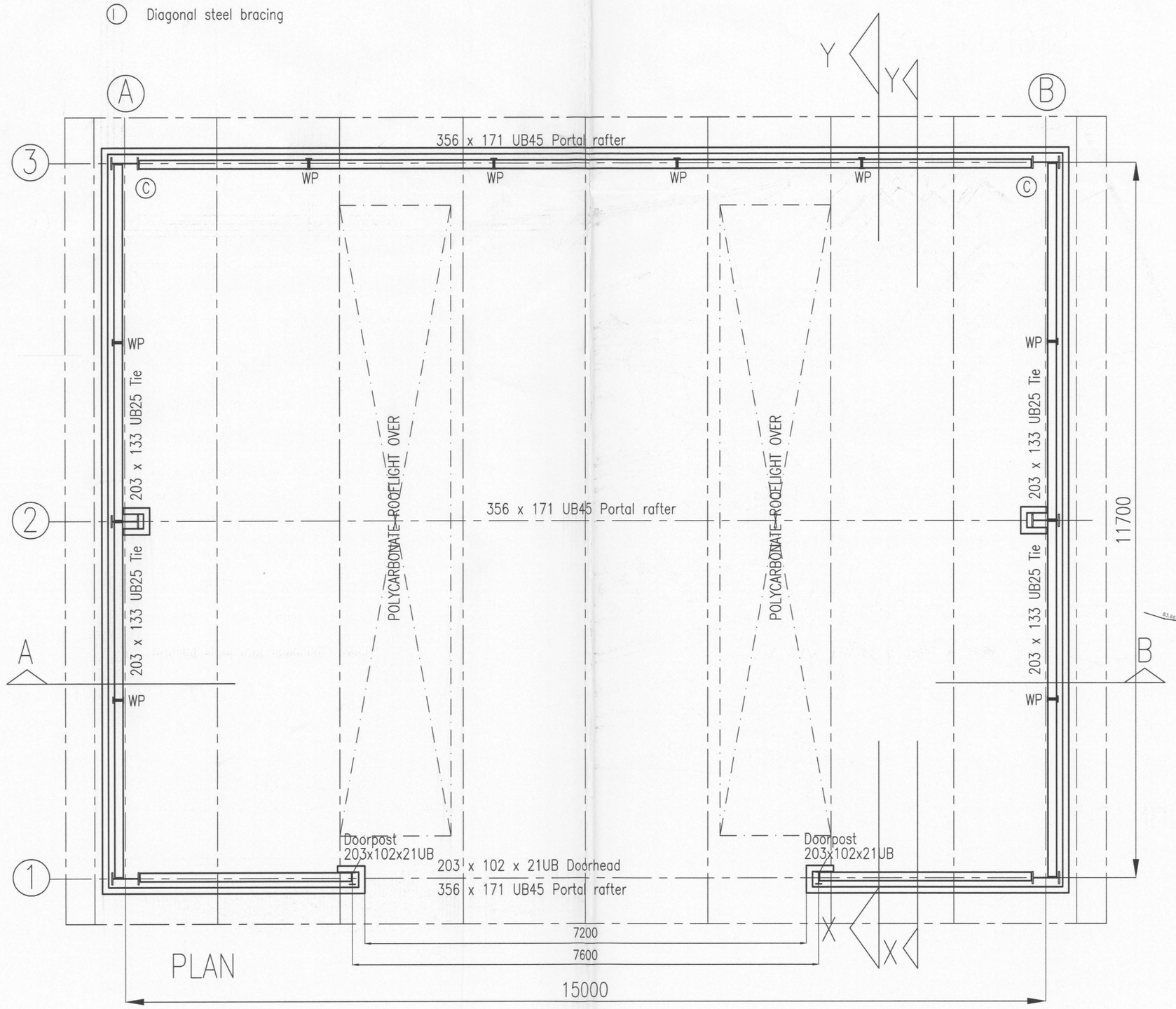

PLAN



LOCATION PLAN
1:500

Revisions:

A – Revised design to portal frame. 11/02/11
B – Perimeter fencing & gates added. 04/08/11
C – Cladding materials revised. 21/05/12

0 1 2 3 4 5
metres

WOOD CHIP STORE, PEAR TREE FARM
DESFORD LANE, RATBY
LEICS. LE6 0LN

Client CAWREY LTD.

Drawing PLAN, SECTION & ELEVS

Draw No. AL(0)2	958	rev C	Drawn PWC
Scale 1:50,100 at A1	Date 12/01/11		Check PWC

ARCHITECT
5 WELLINGTON STREET
LEICESTER LE1 6HH
TEL. 0116 255 6305
FAX. 0116 255 3347
MOB. 07771 912062
info@paulcleaver.co.uk

PAUL CLEAVER