08/00493/FUL

15 MAY 2008

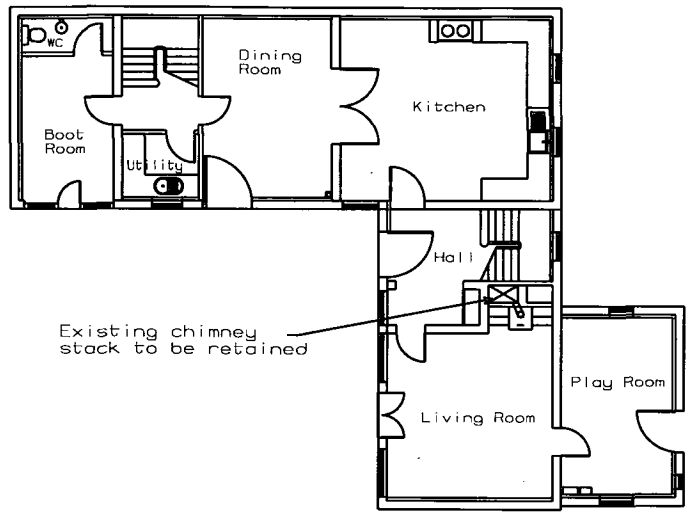

Ground Floor Plan

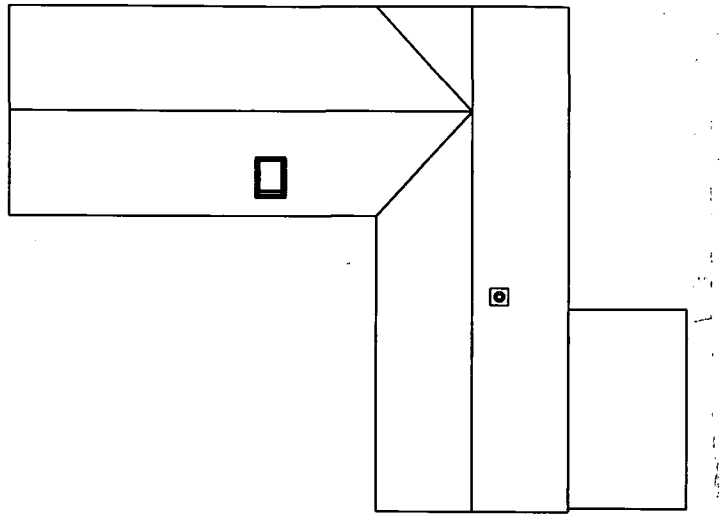

Plan View

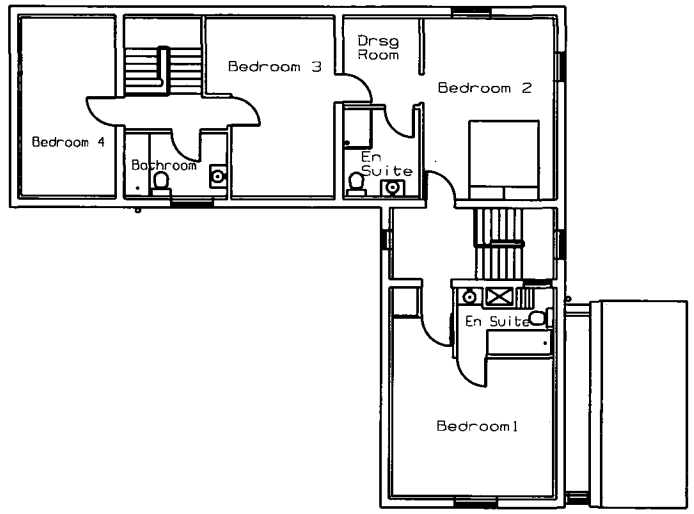

First Floor Plan

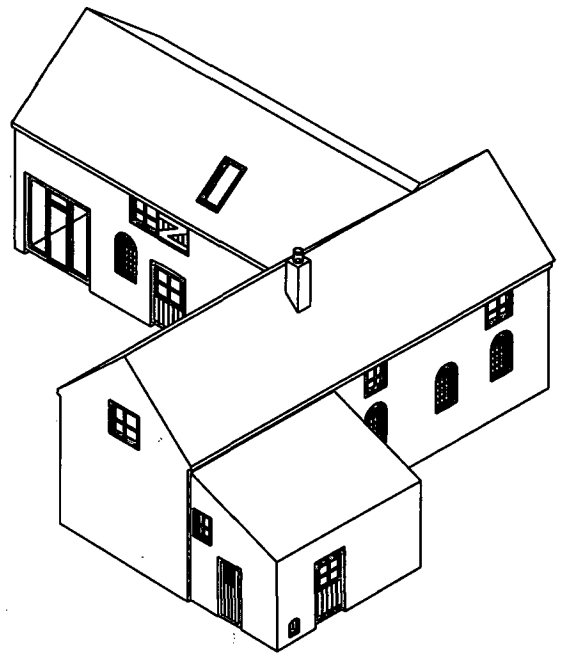

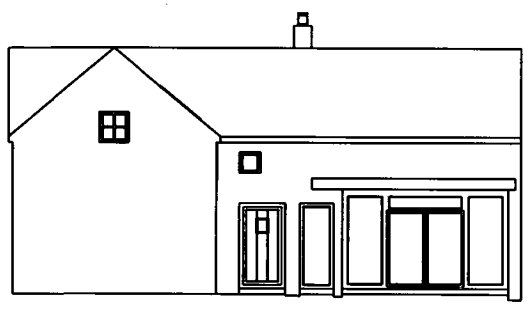

South Elevation



East Elevation

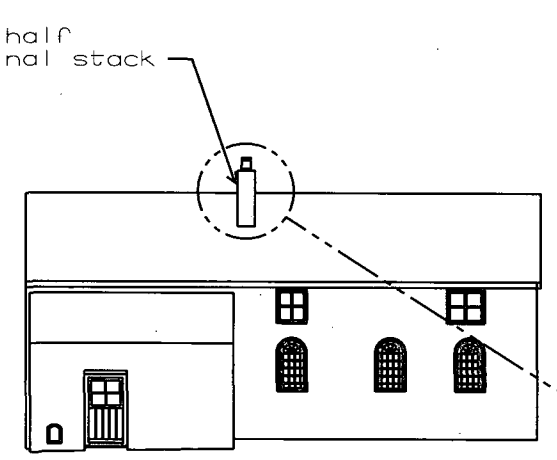

North Elevation

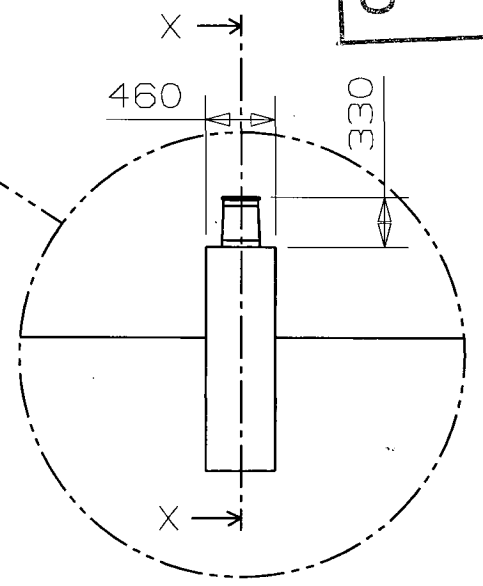

Scale 1:50

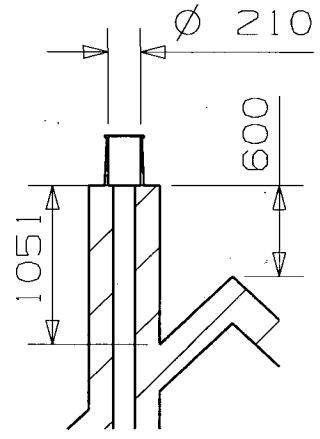

X-X

RECEIVED
29 MAY 2008
DEVELOPMENT SERVICES

Planning Services
APPROVED PLAN
18/7/08

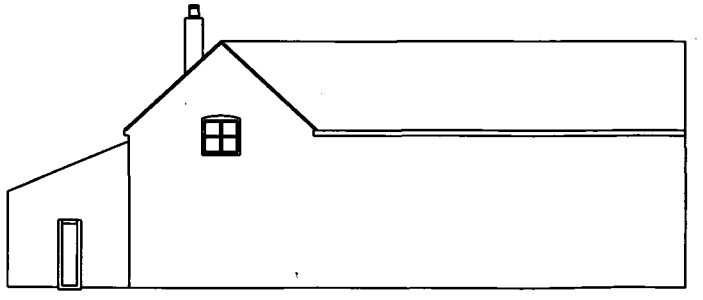

West elevation

Drawn by: C. Fripp	Issued: 15 May 2008	Title: Canterbury Coach House —
Scale 1:200 Rev B	Size: A3 Sheet 1 of 2	Drawing No: 805041