DISCONS.

PHILLIPS JOINERY LIMITED

Phillips Joinery Limited

Joinery Manufacturers

Airfield Industrial Estate, Ashbourne, Derbyshire DE6 1HA

Telephone: (01335) 343614 Fax: (01335) 300674

website: www.phillipsjoinery.co.uk email: sales@phillipsjoinery.co.uk
drawing office: (01335 347952) email: mike.phillips@phillipsjoinery.co.uk

DATED:	22.03.2011
CLIENT:	PJL
SITE:	Stock Drawing
DRAWING NUMBER:	Fixed Glazing and Doors

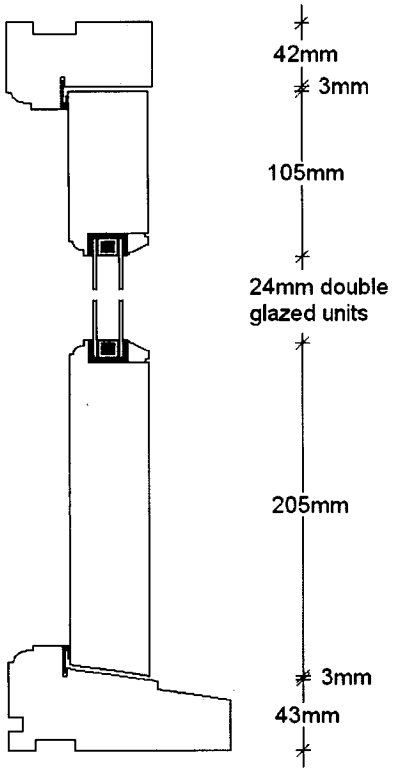

1:5 SECTIONS

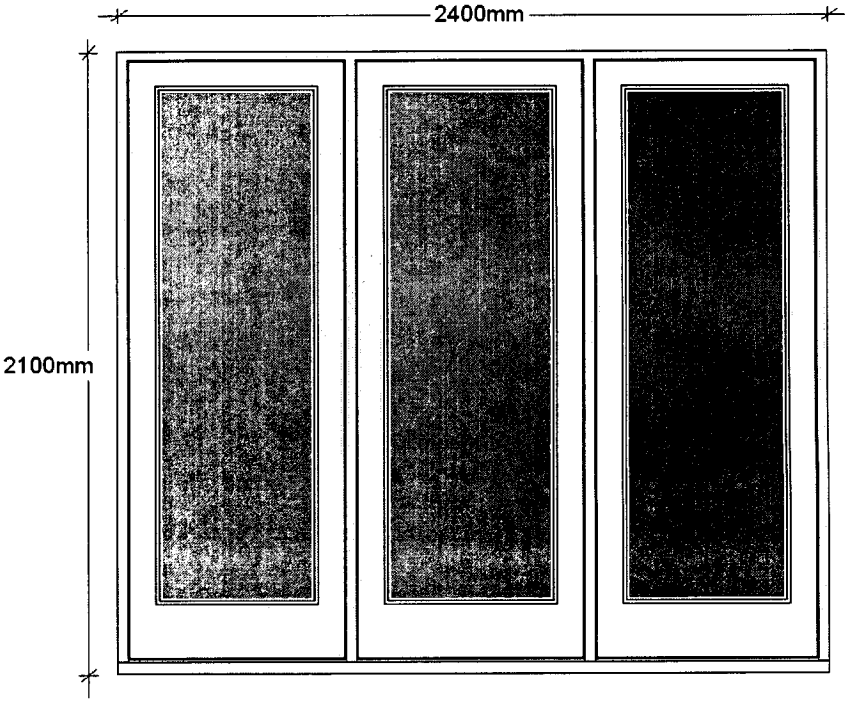

Sections apply to both fixed glazing and opening doors

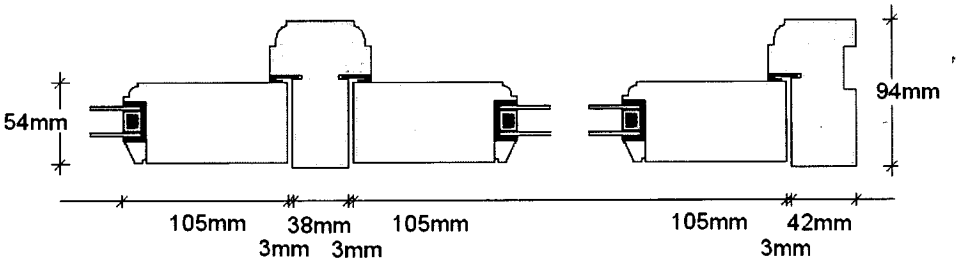

Company No. 2629911 Registered in England

DISCONS

Phillips Joinery Limited

Joinery Manufacturers

Airfield Industrial Estate, Ashbourne, Derbyshire DE6 1HA

Telephone: (01335) 343614 Fax: (01335) 300674

website: www.phillipsjoinery.co.uk email: sales@phillipsjoinery.co.uk

drawing office: (01335 347952) email: mike.phillips@phillipsjoinery.co.uk

PHILLIPS JOINERY LIMITED

DATED:	01.04.2011
CLIENT:	PJL
SITE:	Stock Drawing

DRAWING NUMBER: **Double Boarded Door**

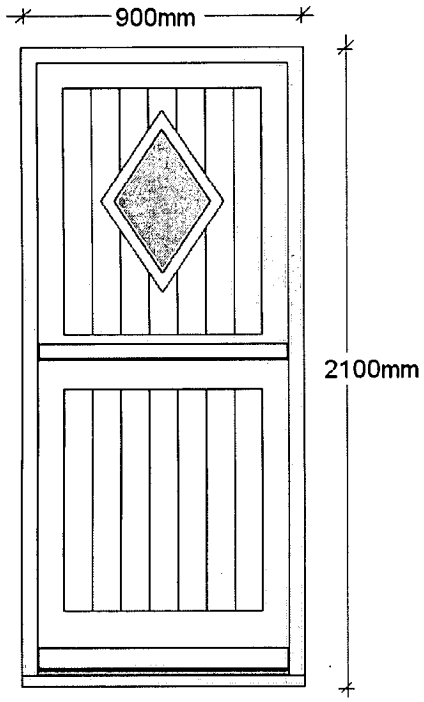

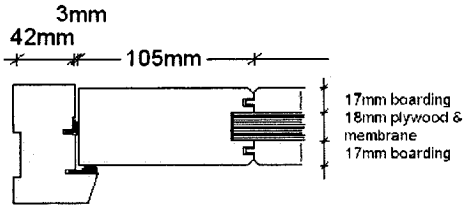

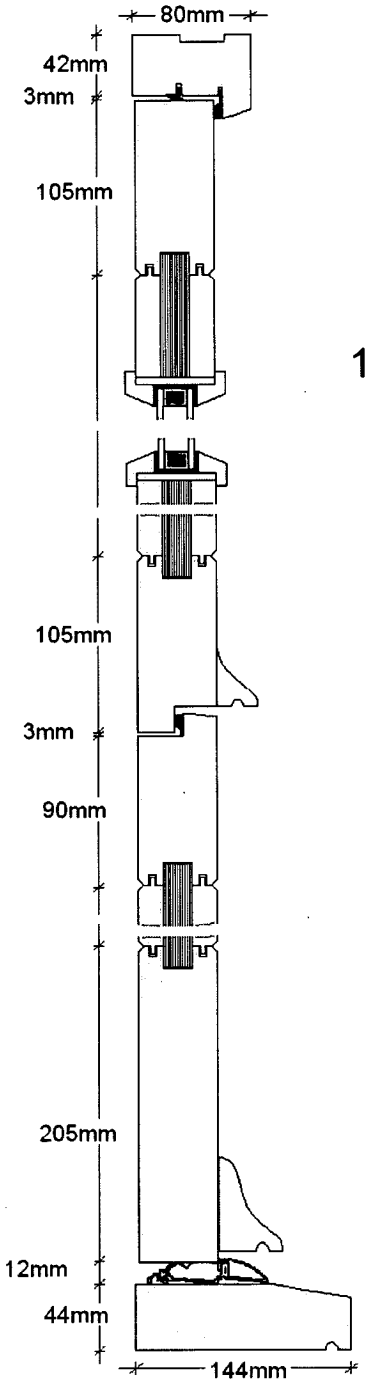

1:5 sections

DISCON S

PHILLIPS JOINERY LIMITED

Phillips Joinery Limited

Joinery Manufacturers

Airfield Industrial Estate, Ashbourne, Derbyshire DE6 1HA

Telephone: (01335) 343614 Fax: (01335) 300674

website: www.phillipsjoinery.co.uk email: sales@phillipsjoinery.co.uk

drawing office: (01335 347952) email: mike.phillips@phillipsjoinery.co.uk

DATED:	22.03.2011
CLIENT:	PJL
SITE:	Stock Drawing
DRAWING NUMBER:	Sliding Folding Doors

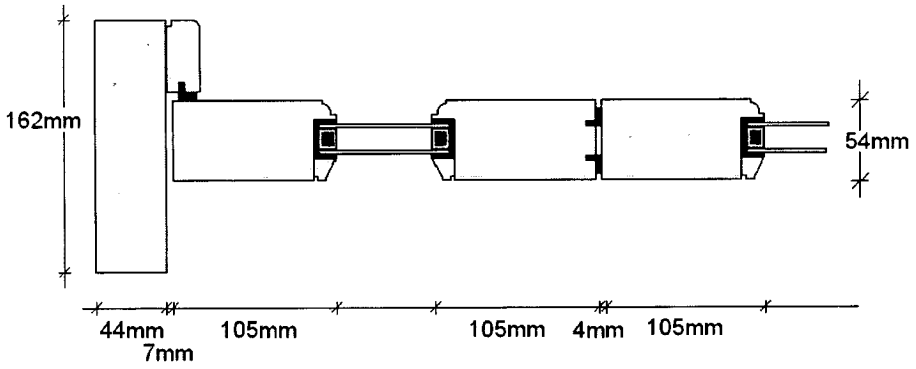

1:5 SECTIONS

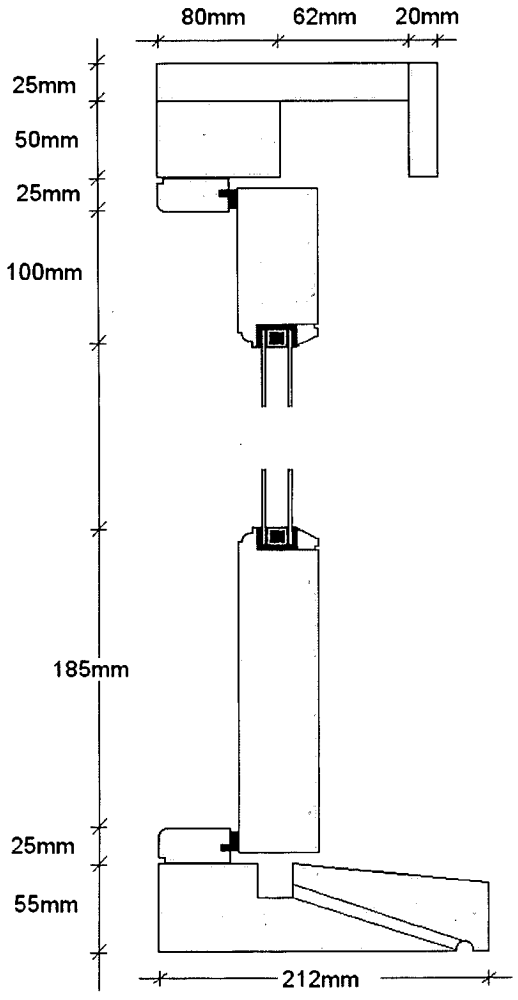

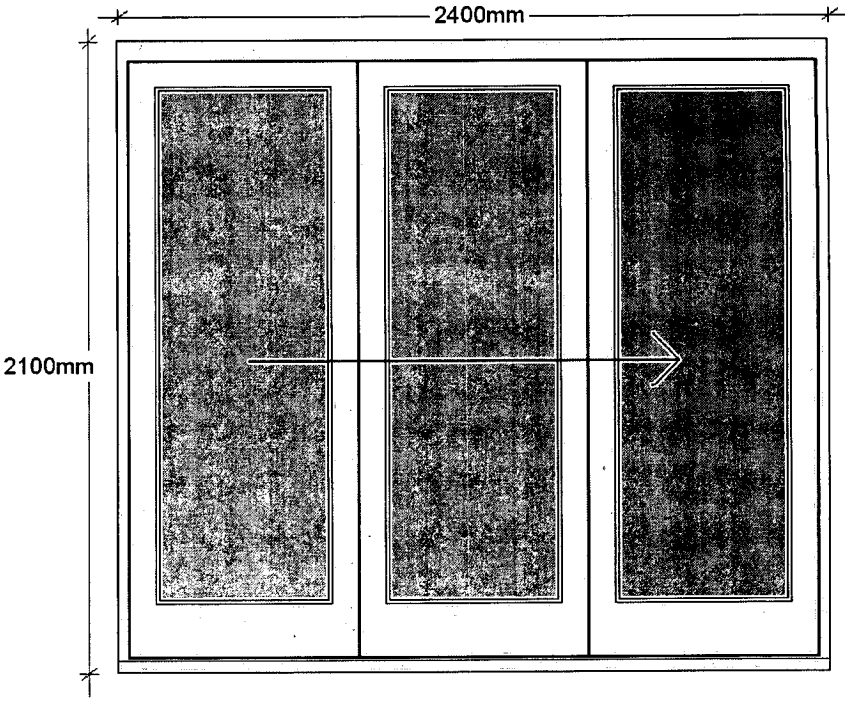

DISCONS

PHILLIPS JOINERY LIMITED

Phillips Joinery Limited

Joinery Manufacturers

Airfield Industrial Estate, Ashbourne, Derbyshire DE6 1HA

Telephone: (01335) 343614 Fax: (01335) 300674

website: www.phillipsjoinery.co.uk email: sales@phillipsjoinery.co.uk
drawing office: (01335 347952) email: mike.phillips@phillipsjoinery.co.uk

DATED:	11.04.2011
CLIENT:	PJL
SITE:	Stock Drawing Rev B

DRAWING NUMBER: **Slimlite Casement Window**

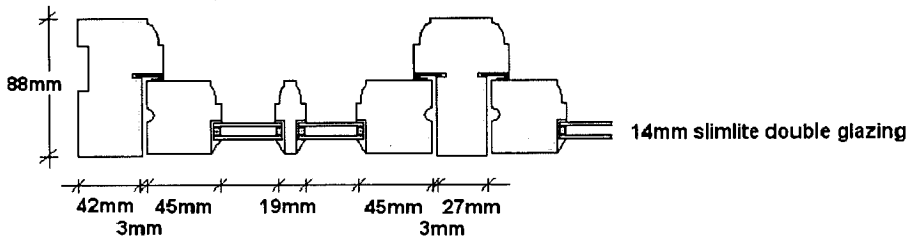

1:5 SECTIONS

