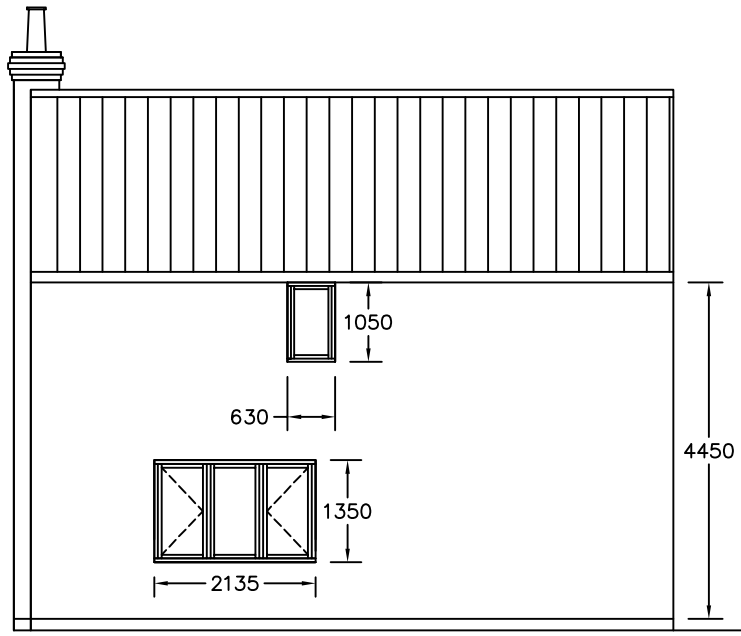

East Elevation

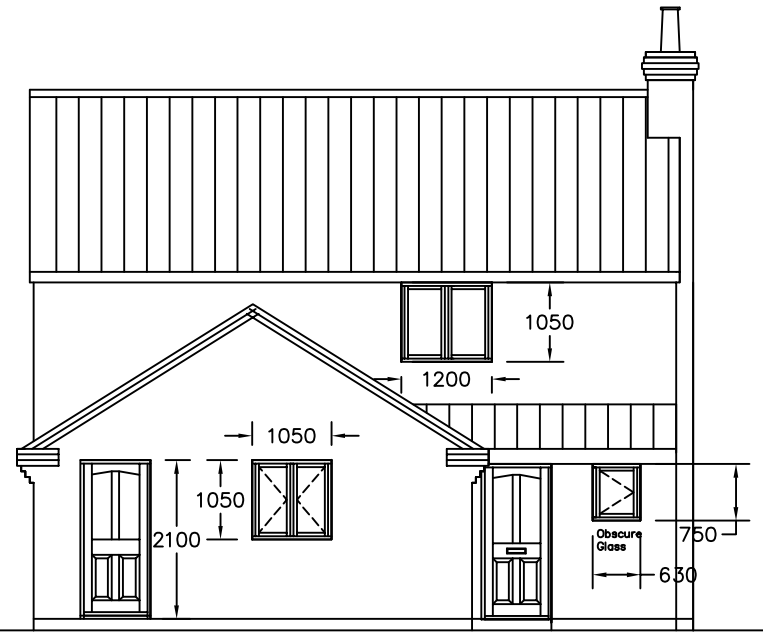

West Elevation

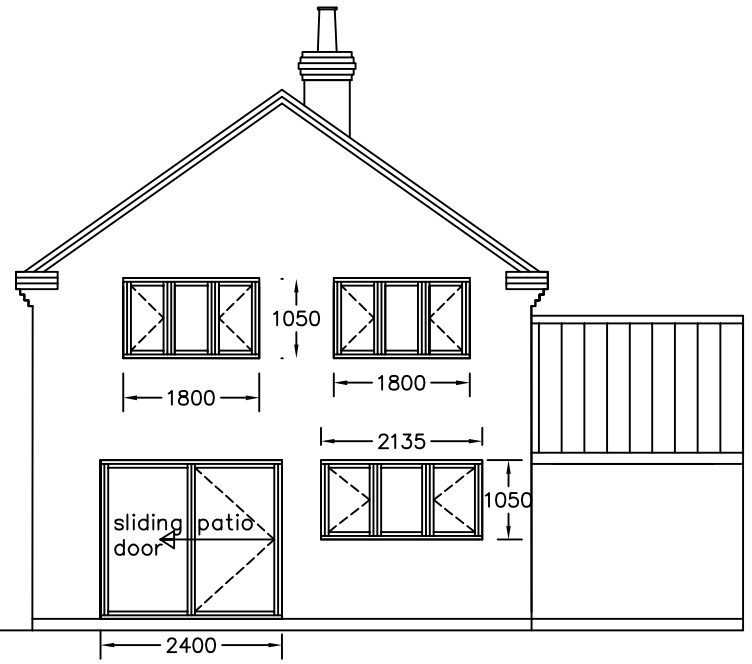

North Elevation

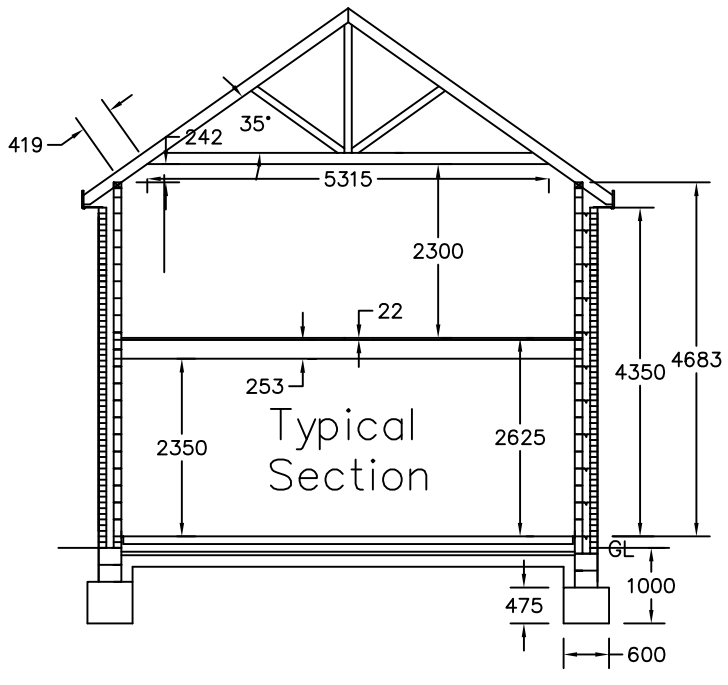

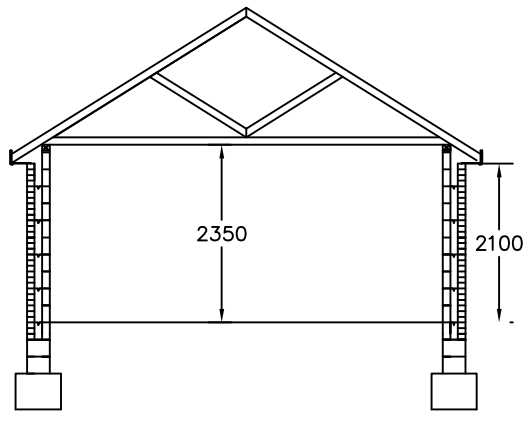

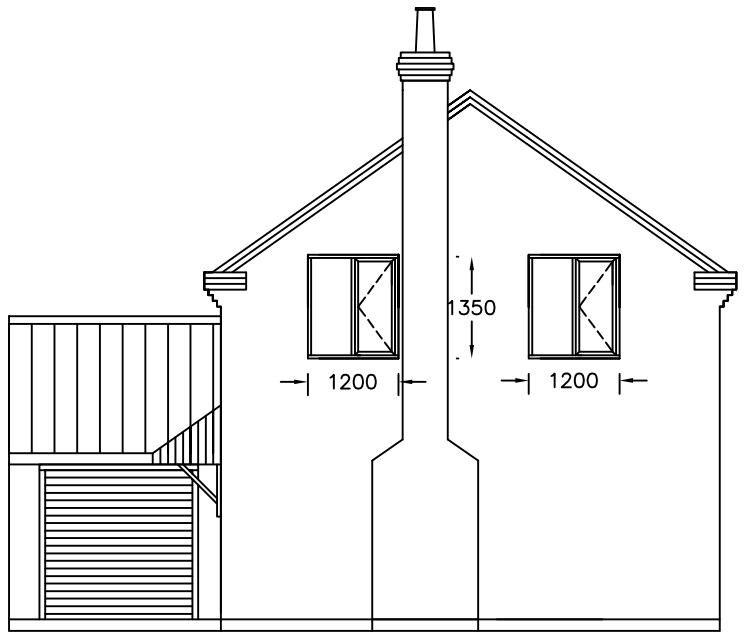

South Elevation

0 2 4 6 8 10m

Material Schedule

BRICKS
BAGGERIDGE TUSCAN RED MULTI
ABOVE 3 COURSES OF BLUES

ROOF TILES
REDLAND REGENT SLATE GREY

WINDOWS AND DOORS
WHITE UPVC

GUTTERS
BLACK HALF ROUND PLASTIC

FASCIA AND SOFFIT
WHITE UPVC

FENCE BETWEEN NEW HOUSES
CONCRETE POSTS & GRAVEL BOARDS,
FEATHEREDGE PANELS.

JAMES BEESTON

DESIGN & BUILD CONTRACTORS

PROJECT

PROPOSED NEW BUILD OF 1 HOUSE TO THE SIDE OF 23 CHERRY ORCHARD CLOSE, HIGHAM ON THE HILL, LEICESTERSHIRE

CLIENT

MR T BARTON

DRAWING NO

ELEVATIONS

SCALE 1:100 at A3

107 LIMBY HALL LANE, SWANNINGTON,
COALVILLE, LEICESTERSHIRE, LE67 8QG
TEL. 01530 810496

CHANGE OF DESIGN OF SOUTH ELEVATION WINDOWS