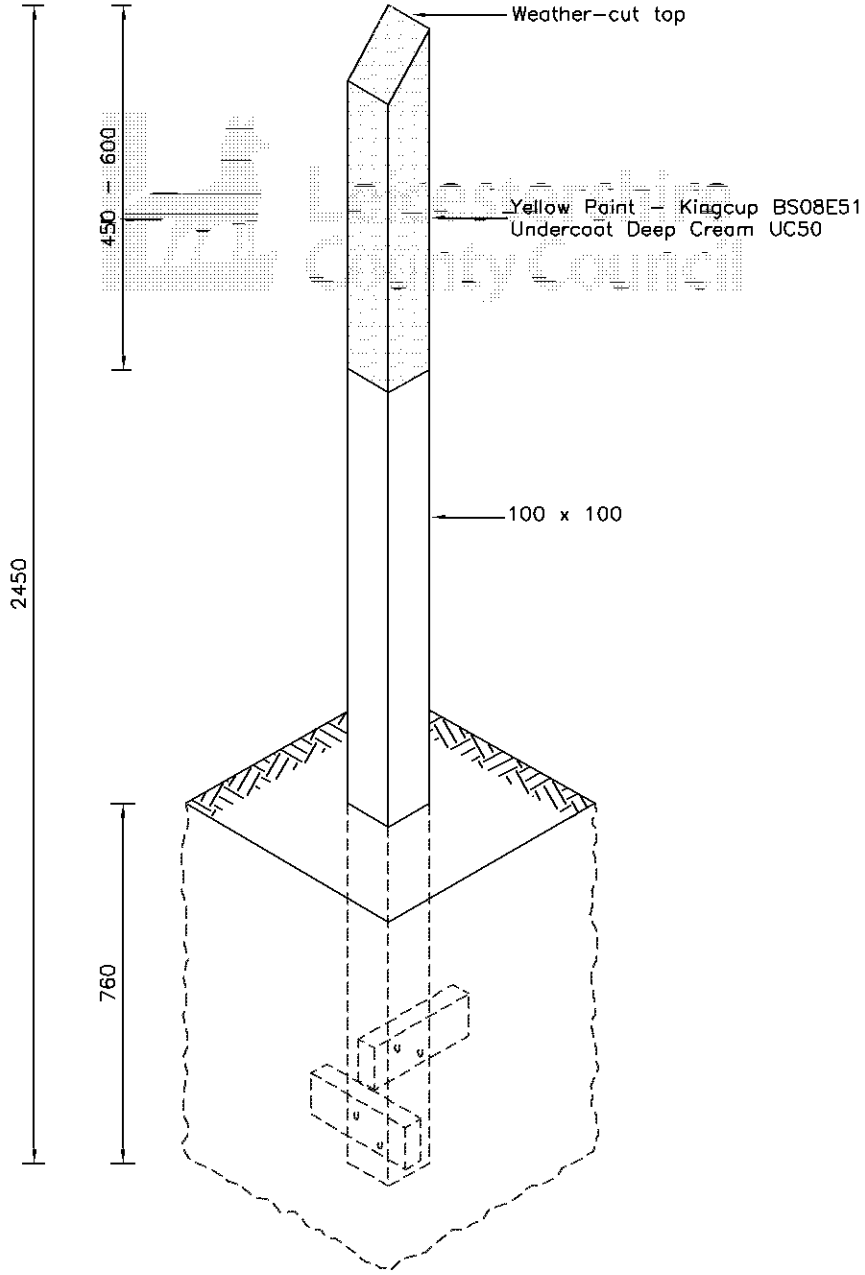

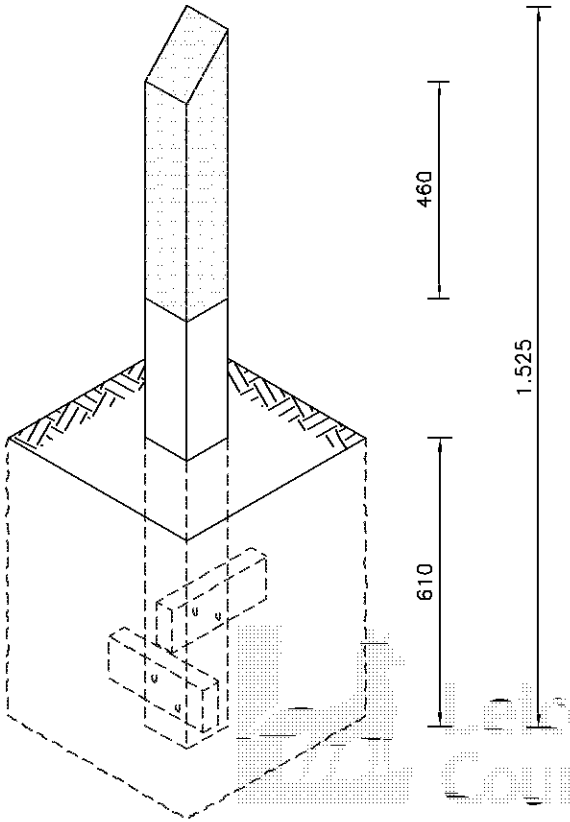

NOTES:

1. All dimensions are in millimetres unless otherwise stated.
2. All timber should be sawn, tanalised softwood, pressure treated to conform to BS 4072.
3. Sawn ends should be treated (flood coated) by dipping in a recognised wood preservative, particular attention should be given to the end grain of supporting posts, for all strutures which are placed in the ground.
4. The post should be sited in such a way that the flat surface is at right angles to the line of the path.
5. Attach 2 x 250 long off–cut rail pieces to the bottom of the post using four 25mm nails, to anchor it. Post to be secured with dry mix cement and rubble and soil compacted.
6. The top of the post should be weather cut and the top 450 – 600 of the post must be painted yellow using Leylond paints:– Undercoat – Deep Cream UC50 Gloss – Kingcup BS 08E51
7. The post should be positioned to be seen by users of the path from long distances.

©Crown copyright 2007. All rights reserved. Use of this image is limited to viewing on-line and printing one copy. Leicestershire County Council. 100019271.

Leicestershire County Council

DEPARTMENT OF HIGHWAYS TRANSPORTATION AND WASTE MANAGEMENT

TITLE:

WAYMARK POST

DRAWING NUMBER	DATE
SD/FP/6	SEPTEMBER 2007
AUTOCAD REF	SCALE
K:\GENERAL\D9997\STDDRG\SDFP6	NOT TO SCALE

Rev	Date	Notes on Revision