Amended Plan

DEVELOPMENT SERVICES
- 9 DEC 2008
RECEIVED

Received
9/12/08

NOTES

This drawing to be read in accordance with the specification/bills of Quantities and related drawings.

All Dimensions to be scaled from this drawing. All stated dimensions to be verified on site and the Architect notified of any discrepancies.

0 100
Scale bar 100mm at 1:1

## SCHEDULE OF PARKING

| | |
|---|---|
| SPACE WIDTH (As Existing-Average) | 2.4M |
| AISLE WIDTH (As Existing-Min) | 6M |
| PARKING SPACES | |
| DISABLED | 192 |
| PARENT AND TODDLER | 14 |
| OVERFLOW PARKING | 9 |

Hinckley & Bosworth Borough Council
Planning Services
APPROVED PLAN
9/12/2008

| | |
|---|---|
| TOTAL | 215 |
| TROLLEY BAYS | 9 |
| PARKING RATIO (PARKING SPACES+P&T) | 1:13.9 |
| PARKING RATIO (TOTAL) | 1:13.4 |

## NOTE

ANY DISCRPENCIES IN THE DRAWING ARE TO BE REPORTED TO THE LEAD ARCHITECT PRIOR TO ANY IMPLEMENTAION/INSTALLATION.

## LEGEND

BB = BELISHA BEACON
RB = RAM-RAID STAINLESS STEEL BOLLARD

INDICATES EXTENTS OF BLOCK PAVING FINISH

INDICATES EXTENTS OF TARMAC

PLEASE REFER TO LATEST REVISION OF DESIGN STANDARD E01.01.01 FOR WHITE LINING. ALL ROAD MARKINGS TO BE IN ACCORDANCE WITH THE DEPARTMENT FOR TRANSPORT TRAFFIC SIGNS REGULATIONS AND GENERAL DIRECTIONS 1994 AS SET OUT IN THE DEPARTMENT OF TRANSPORT TRAFFIC SIGNS MANUAL (HMSO).

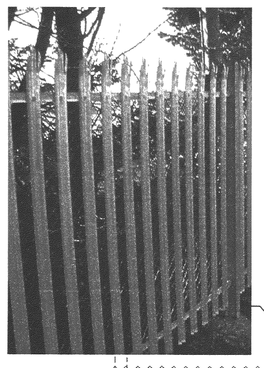

PALISADE FENCING DETAIL

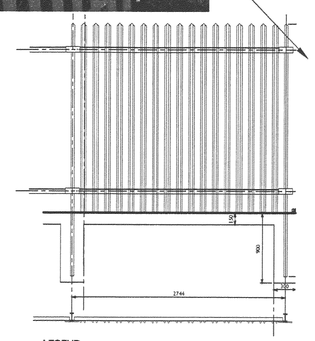

LEGEND
1 = 102 x 44 x 2.44 REI
2 = RAILS
3 = PALE 3mm 'V' RECESS (EMBOSS)
4 = 203 x 203 x 2.44 (NOM)
FINISH: GALVANISED TO BS 729
POWDER COATED OPTIONAL EXTRA
MANUFACTURED IN ACCORDANCE WITH BS 1722 PART2

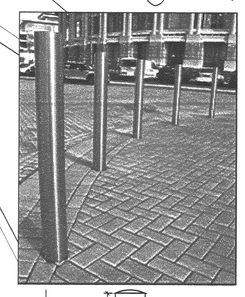

ANTI-RAM RAID BOLLARD DETAIL



TESCO STANARD COVERED TROLLEY BAY

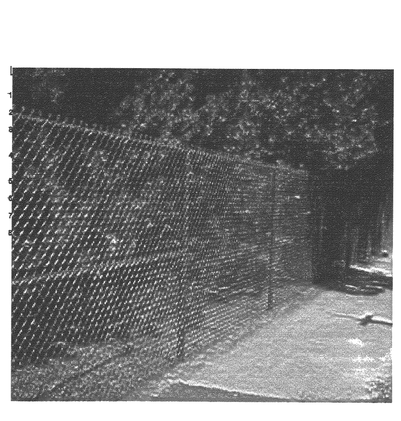

CHAIN LINK FENCING DETAIL

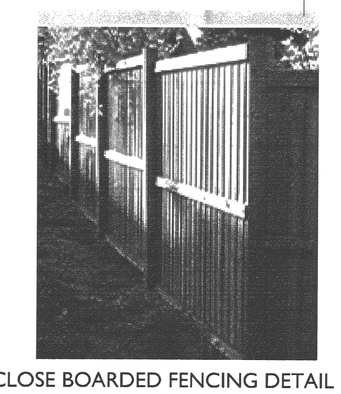

CLOSE BOARDED FENCING DETAIL

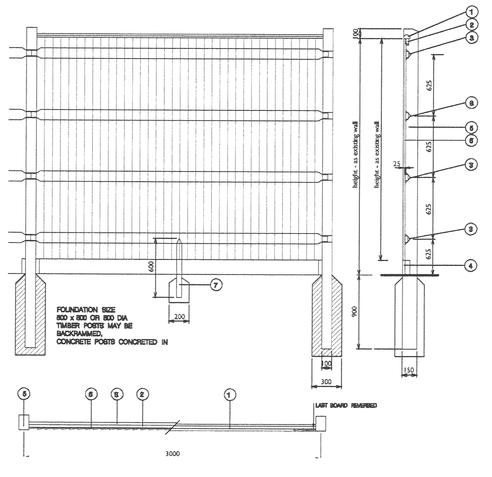


LEGEND
1 – CAPPING 65 x 28 THICK WEATHERED
2 – COUNTER RAIL 95 x 25 (95 x 25 MORTICE)
3 – ARRIS RAIL 4m 67 x 97 TENNONED (DRIVE IN) (95 x 25 MORTICE)
4 – GRAVEL BOARD 150 x 25 CLEATS 150 x 50 x 38
5 – POSTS 3400 x 100 x 100 HALF WEATHERED (3 TIMES MORTICED) CORNER POSTS 3400 x 150 x 150 HALF WEATHERED (10 TIMES MORTICED)
6 – FEATHER EDGE BOARD 2250 x ex 100 x 22 (19-9 X 100)
7 – CENTRE STUMP 2100 x 50 x 50 CUT AT TOP TO FIT BOTTOM RAIL




| REV | DATE | NOTE | IM |
|---|---|---|---|
| D | 09.12.08 | 3M HIGH FENCE TO CAR PARK AT NORTH WEST OF SITE OMITTED | LH |
| C | 13.10.08 | ACO DRAIN ADDED, ELEC. RESTRICT. COVENTANT SHOWN FENCE TOUND SIZES INC. | LH |
| B | 08.10.08 | GATES ADDED TO WEST BOUNDARY & BEHIND STORE | LH |
| A | 03.10.08 | VARIOUS IMAGES ADDED. ASSED FENCE AND BOLLARD DETAILS. VARIOUS NOTES AMENDED. | AS |

Project
PROPOSED REFURBISHMENT
TESCO STORE
HINCKLEY

Title
PROPOSED SITE PLAN

Scale
1:200 @A0

Date
SEPT 2008

Drawn
AS

Checked

Drawing Number
6460_100

Revision
D


**Saunders Partnership** Architects
The Barn
32 Bridge Road
Welwyn Garden City
Hertfordshire, AL7 3AX

T 01707 385300
F 0870 6222126
www.saundersarchitects.com
offices at Welwyn Garden City | Bristol | Manchester


SAUNDERS