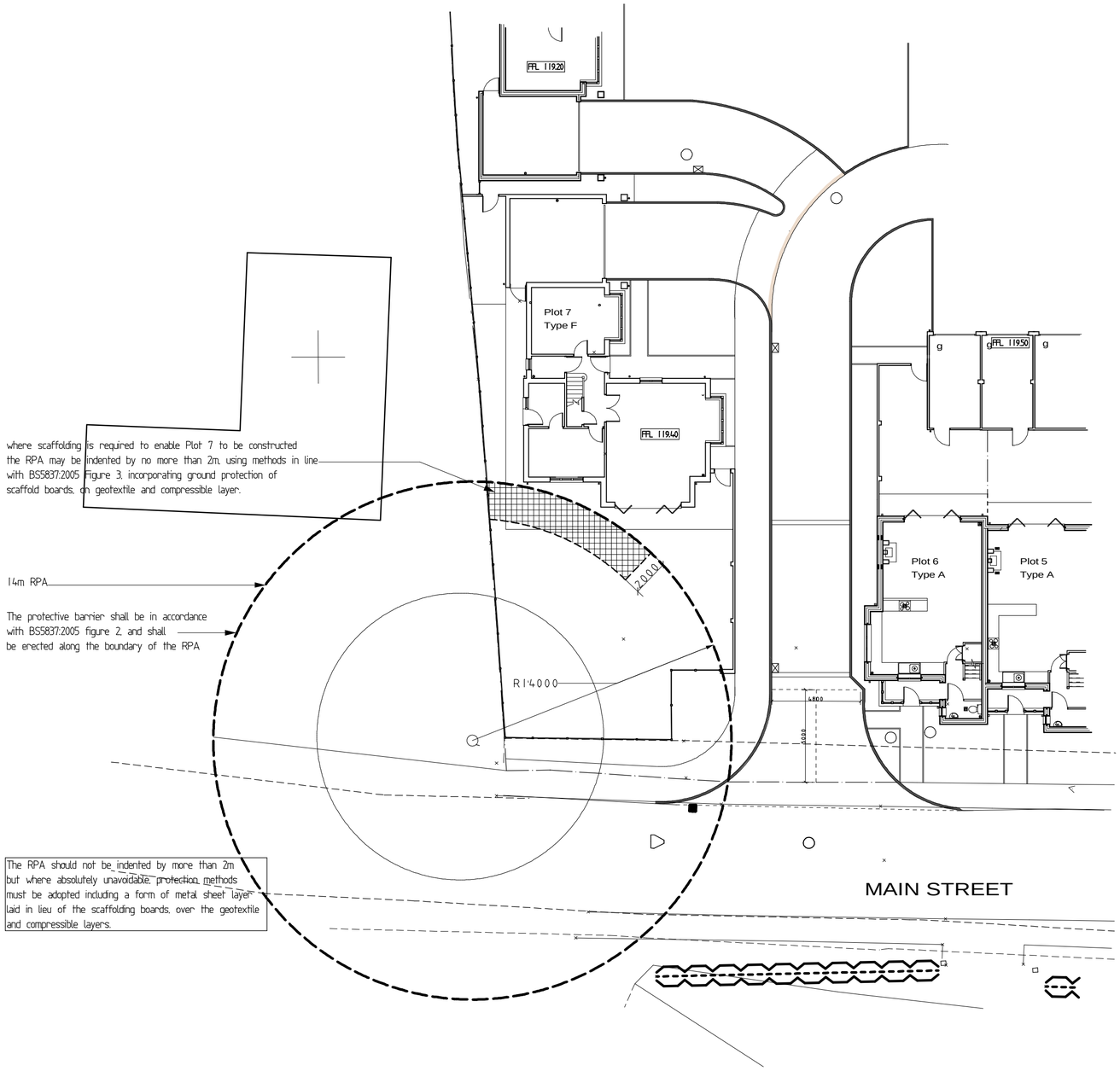

PART SITE PLAN

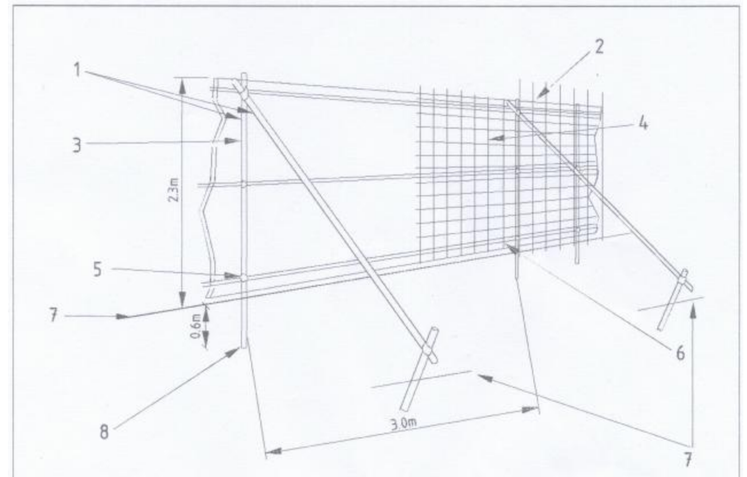

1 Standard scaffold poles
2 Uprights to be driven into the ground
3 Panels secured to uprights with wire ties and where necessary standard scaffold clamps
4 Weldmesh wired to the uprights and horizontals
5 Standard clamps
6 Wire twisted and secured on inside face of fencing to avoid easy dismantling
7 Ground level
8 Approx. 0.6 m driven into the ground

Figure 2 — Protective barrier

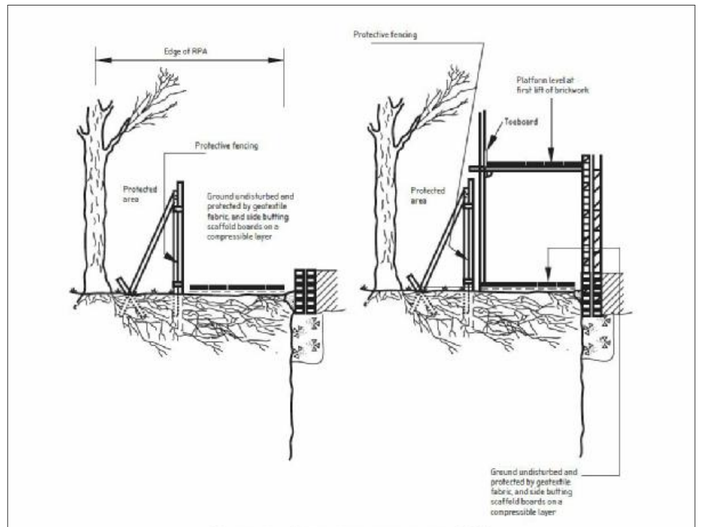

Figure 3 — Scaffolding within the RPA

THIS DRAWING IS TO BE READ IN CONJUNCTION WITH ALL OTHER DRAWINGS. CHECK ALL DIMENSIONS LEVELS AND ANGLES PRIOR TO COMMENCING WORK. NOTIFY ARCHITECT IMMEDIATELY SHOULD ANY DISCREPANCIES BE NOTED. TO ENSURE A SOLUTION CAN BE AGREED BETWEEN ALL PARTIES PRIOR TO THE GIVEN ELEMENT OF WORK BEING UNDERTAKEN

SAVAGE HAYWARD ARCHITECTS
19 Station Rd Hinckley, Leicestershire, LE10 1AW, 01455 635665, FAX- 01455 618971

Client	SPRINGBOURNE HOMES		
Project	Proposed Housing Main Street Carlton		
Drawing	proposed works within Root Protection Area		
Auth	JAF	Date JUL 2009	Drawing No 82
Scale	1 : 200	Job No 07/117	

THIS DRAWING IS THE COPYRIGHT OF SAVAGE HAYWARD. REPRODUCTION IN ANY FORM OF WHOLE OR PART IS FORBIDDEN WITHOUT PRIOR WRITTEN PERMISSION OF THE COPYRIGHT HOLDER
DO NOT SCALE FROM DRAWING AND ONLY FIGURE DIMENSIONS ARE TO BE USED

PDF created with pdfFactory Pro trial version www.software-partners.co.uk