SUBSOIL TYPES

The design of suitable foundations depends on many factors in addition to th ground bearing pressure.

These factors include:-

1. Soil Classification
2. Assessment of allowable bearing pressure
3. Chemical analysis of the soil
4. Water table level (if close to the surface)
5. Chemical analysis of ground water (if close to the surface)

If there is any doubt about the ground conditions then a qualified civil enginee

Allowable bearing pressure which may be expected from various types of soil

Types of Subsoil	Condition of subsoil	Field test applicable	Approximate allowable ground bearing pressure kN/m²
Rock	Not inferior to sandstone, limestone or firm chalk	Requires at least a pneumatic or other mechanically operated pick for excavation	1000
Gravel, sand	Compact	Requires pick for excavation. Wooden peg 50mm square cross section hard to drive beyond 150mm	Dense to very dense 150-400 Loose to medium dense 50-250
Clay, sandy clay	Firm	Can be moulded by substantial pressure with the fingers and can be excavated with graft or spade	50-100
Sand,* Silty Sand* Clayey Sand*	Loose	Can be excavated with a spade. Wooden peg 50mm square in cross section can be easily driven	<75
Silt,* Clay,* Sandy Clay* Silty Clay*	Soft	Fairly easily moulded in the fingers and readily excavated	<75
Silt,* Clay,* Sandy Clay* Silty Clay*	Very soft	Natural sample in winter conditions exudes between fingers when squeezed in fist	<75

*Foundations on these soils require assessment and design by a qualified civil engineer.

Values provided for guidance only.
If any doubt exists a qualified civil engineer should be consulted.

CABLE TRENCHES

Cables buried directly into the ground shall be marked by cable covers or a suitable marking tape.
Buried cables, conduits and ducts shall be at a sufficient depth to avoid being damaged by any reasonably foreseeable disturbance of the ground.
Cables should be surrounded by sand.

CONCRETE

Concrete to have a minimum characteristic strength of 25 N/mm^2 at 28 days.

Minimum cement content to be 300kg/m^3 with a maximum water cement ratio of 0.60. Coarse aggregate size to be 20mm nominal.

PROPOSED WIND TURBINE

REF.....FOUNDATION/001
PREAPP.....PM/09/10269/PREAPP
GREENHILL
TWYCROSS ROAD
SHEEPY MAGNA
Nr. ATHERSTONE
WARWICKSHIRE
CV9 3RS

PASSIVE FOUNDATION DIMENSIONS

Typically used with unfirm or poor subsoil with ground bearing pressure of 75-150 kN/m^2

Overturning Moment kN.m	Bearing pressure kN/m2	Length and width mm	Depth
75	75	2400	1350
75	100	2200	1250
75	150	2200	1250
100	75	2650	1475
100	100	2400	1350
100	150	2300	1300
150	75	3200	1750
150	100	2700	1650
150	150	2500	1400

NON-PASSIVE FOUNDATION DIMENSIONS

Typically used with firm ground with ground bearing pressure of not less than 150 kN/m^2.

Overturning Moment kN.m	Bearing pressure kN/m2	Length and width mm	Depth
75	>150	1450	1600
100	>150	1600	1700
150	>150	1800	1850

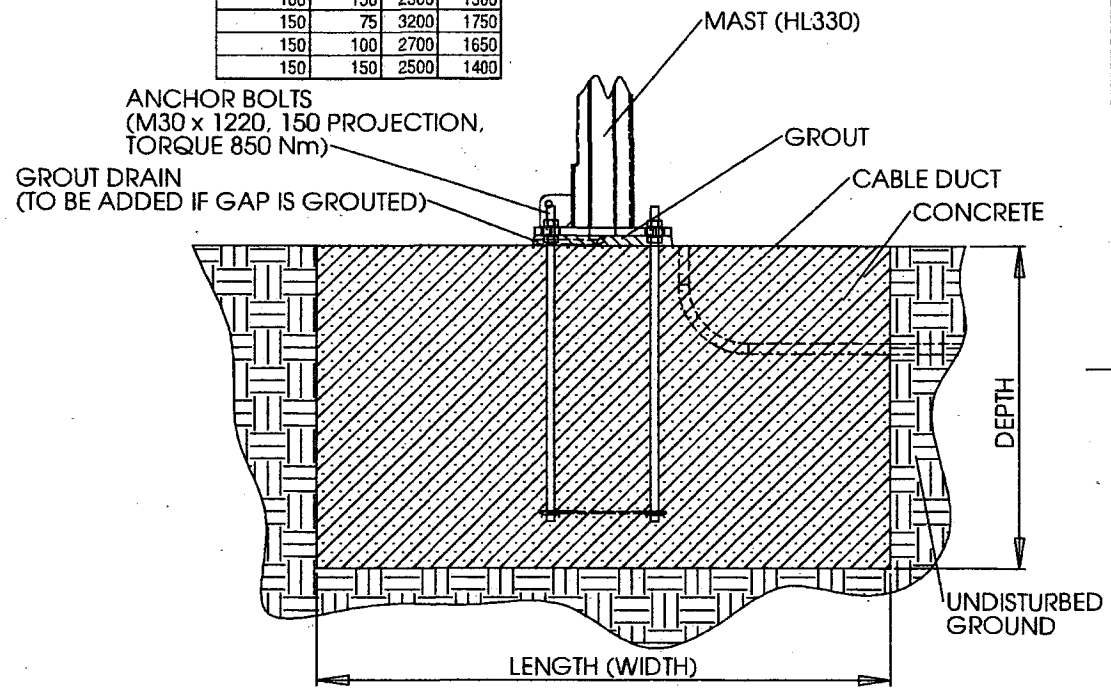

First angle projection

General Tolerance = GT mm or degrees
Size range:-

	>30 =<30	>30 =<120	>120 =<400	>400 =<1000	>1000
L	0.2	0.25	0.5	1.0	2.0
∠	0.25	0.25	0.5		

Lengths (L) and angle (L ∠) = ± GT

Tolerance Symbols ISO 1101

○	roundness	= 0.5 x Ø - GT
⌭	straightness / flatness	= GT
◎	concentricity / run out	= GT
⌯	symmetry	= GT
//	parallelism	= GT
⌖	position	= GT

All dimensions in mm unless otherwise stated.

Date	Name	Alteration	Change no
7/4/09	D Parsons	Issued for guidance only	NA

Inspection dim ( )
Auxilliary dim ( )

	Date	Name
Drawn	7/4/09	D Parsons
Checked		

verticol wind energy ltd

Confidential document
Refer to protection notice ISO 16016

Blank / casting VWE part number / Material

Weight kg: NA

Part name: FOUNDATION GUIDANCE HL330 MASTS

Scale: NA

Sheet 1 of 1

VWE Ltd drawing number: 003K7520AA

Size A3