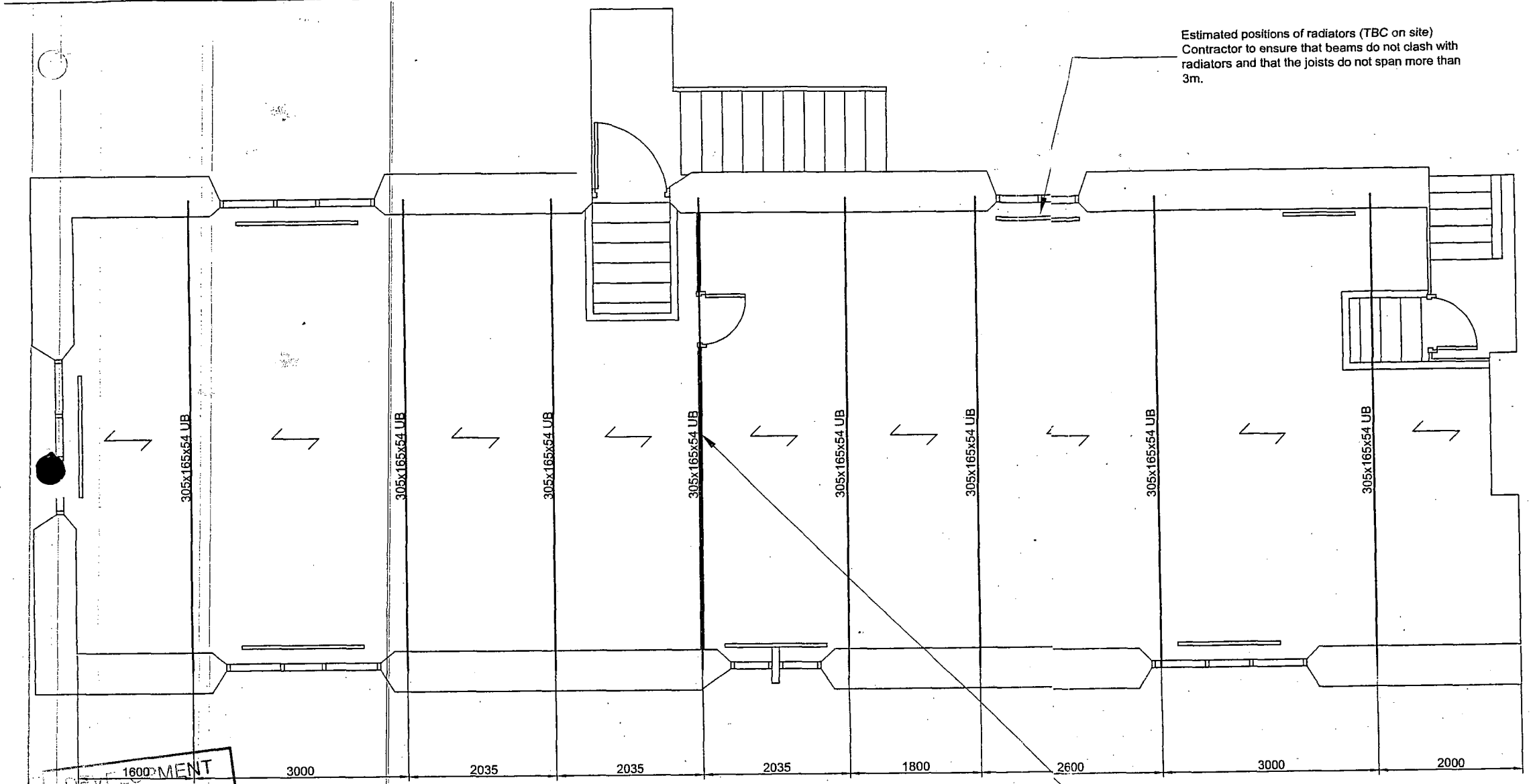

Ground Floor Plan
1:50

DEVELOPMENT SERVICES
04 MAR 2009
RECEIVED

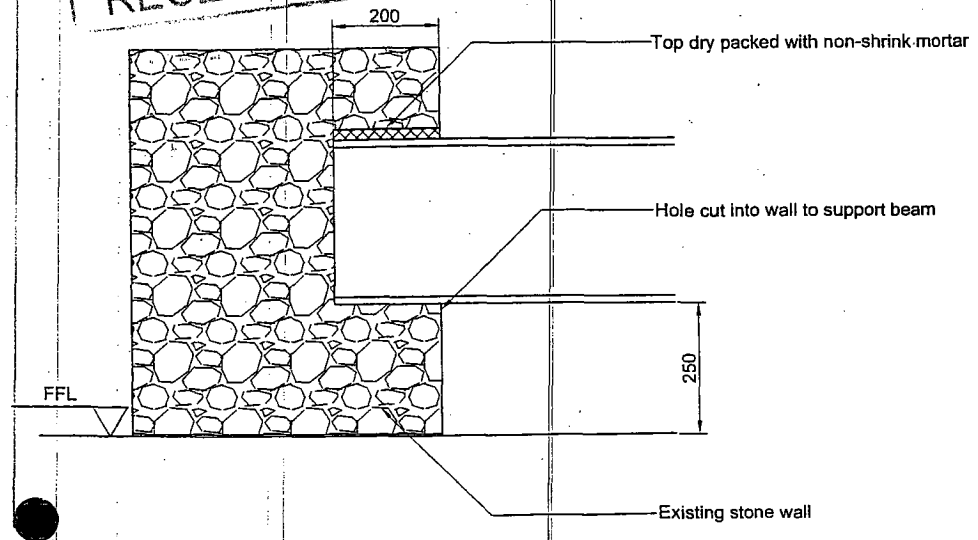

Wall Connection Detail
1:10

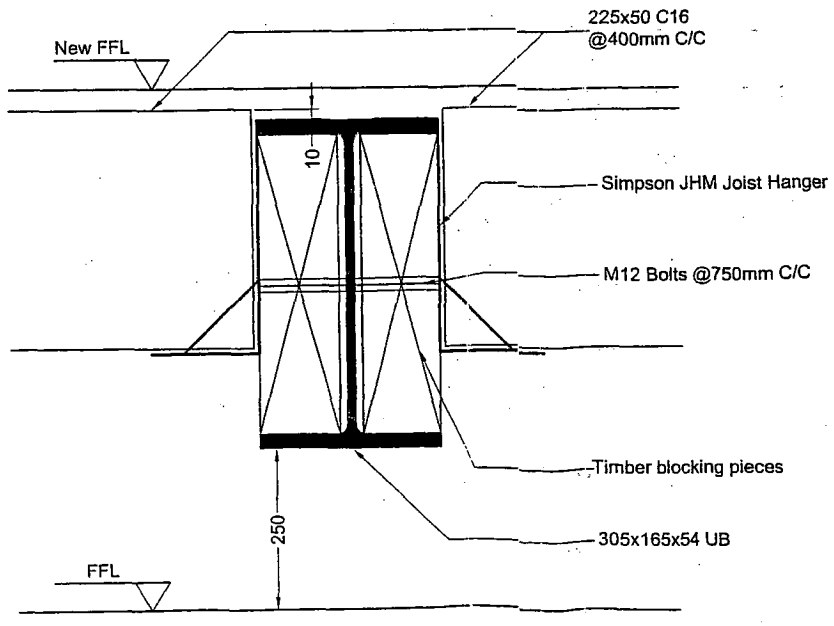

Floor Beam Detail
1:5

Key

Indicates span of 225x50 C16 joists at 400mm centres

Notes:

1. DO NOT SCALE FROM THIS DRAWING.
2. Drawing shall be read in conjunction with all relevant Architects drawings. Any inconsistencie shall be reported to Paul Reading & Partners immediately.
3. Steelwork shall be grade S275 or S355 in accordance with BS EN 10025. Unless noted otherwise steelwork shall be grade S275.
4. All steel to be painted with Corus B3 - Blast clean to Sa 2(1/2), and an approved Zinc Phosphate epoxy primer applied. Minimum dry film thickness to be 80 microns. Nearest equivalent ISO 12944 - S1.01 or S1.03.
5. After erection, damaged paint shall be rubbed back to bare metal and primer as specified shall be applied ensuring 100mm lap with undamaged pain

Rev	Date	Description	In
P1	04/07/07	Issued as Preliminary	J

Paul Reading & Partner
CONSULTING CIVIL & STRUCTURAL ENGINEEI
Park House
22 Warren Park Way, Enderby,
Leicester. LE19 4SA
Telephone: 0116 275 1710
Facsimile: 0116 286 9173
E-mail: leicester@prp.uk.com
Web: www.prp.uk.com

Architect:

Client:
Dixie Grammer School

Project:
Dixie Grammer School
Market Bosworth
Leicestershire

Title:
Steel
Ground Floor
Layout and Details

Drawn:
Checked:
Date: July 2007

© Copyright
PRELIMINARY

Scale: 1:50, 1:10,
Drawing Number: 21028-901