Job Title: Drainage Soakaway Details – Sheet 1

1.

a) Soakaways shall only be allowed as a final resort after all engineering means to provide a positive drainage system have been explored and found to be impractical. The use of soakaways is to be at the discretion of the Engineer and is dependent on the proven existence of continuous highly permeable strata below the surface.

b) For soakaways to be given consideration, the minimum co-efficient of permeability of the strata is 5 X 10 m/s BS 5930 based methods are to be used and the Developer is advised to contact the Engineer's Representative, to arrange for an independent laboratory technician to witness the on-site permeability testing.

c) Soil survey data must be submitted.

d) Any necessary approvals from the local Water Authorities or Environment Agency must be obtained by the Developer and evidence of these approvals submitted to the Adoption Authority before the proposal can be considered.

2.

a) Soakaways chambers should extend down to the proved continuous permeable stratum as approved by the Engineer's Representative. Chambers rings in permeable strata must be perforated and the lower ring must be founded on an in-situ concrete beam.

b) The maximum depth of the chamber shall be two metres below finished ground level. A typical cross section is provided.

3.

a) Soakaway volumes shall be such that they can accommodate at least the whole of a five year twelve hour storm, (42mm over a 12 hour period- 3.5mm/hour) in the volume available above the base of the chamber and below the drain inverts (effective volume) - the diameter and the number of chambers to be adjusted accordingly. Storage may be reduced to take into account of proven percolation results, adjusted as in paragraph b) below. Calculations must be submitted. The Engineer's Representative may require extra soakaways and/or revised positioning of the soakaway chambers.

b) Allowance should be made for the in service effects of siltation and swelling, 33% for gravel/sands and 'stone' layers in chalk and 50% for chalk and others. The Developer is advised to contact the Engineer's Representative to arrange for attendance on site to witness the soakage testing when it is carried out.

4. Soakaways to be linked by overflow pipes as required.

5. Soakaway chambers shall not be sited under the carriageway or under the footway/footpath; areas of verge must be set-aside for this purpose.

6. BRE Digest 365 (soakaways) is not applicable to Cambridgeshire highway drainage. However, BS5930 is appropriate as mentioned in 1.b) above – see 7, for details.

Drainage - Soakaway Chamber Details

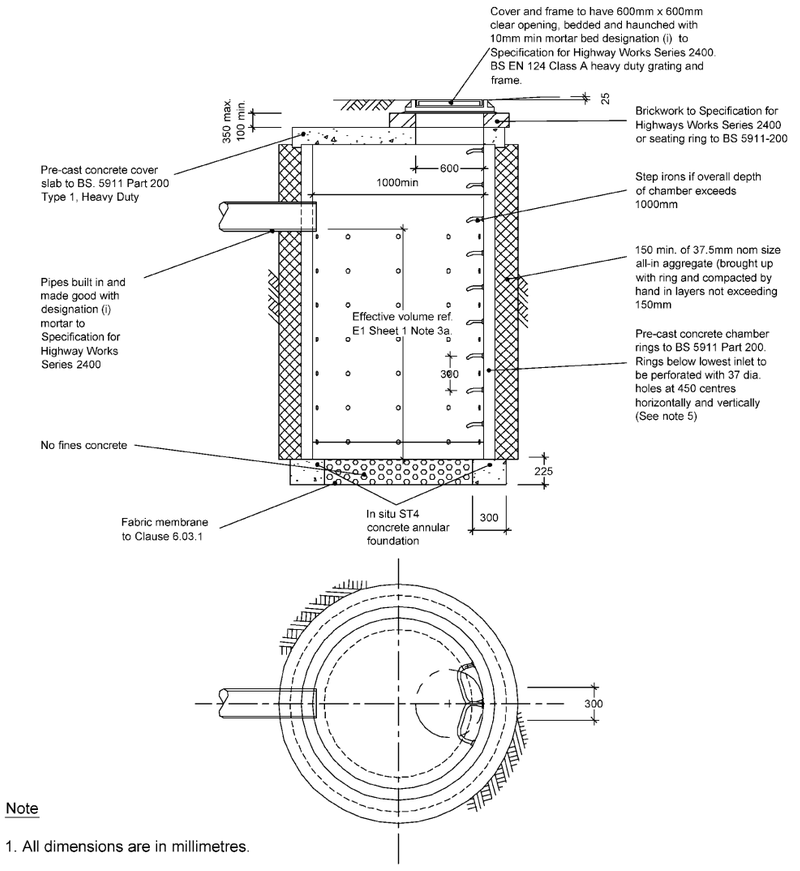

Note

1. All dimensions are in millimetres.

2. Rings to be placed centrally on annular concrete foundation.

3. Chamber walls and cover slab to be constructed in precast concrete to BS 5911-200

4. All ST concrete shall be to Specification for Highway Works, Clause 2602

5. At least one perforated ring must be provided, with more perforated segments required to match depth of permeable strata up to the pipe invert.

COPYRIGHT NOTICE: ALL PREPARED DESIGNS, DRAWINGS SPECIFICATIONS & PHOTOGRAPHS ARE THE PROPERTY OF LOGIC DEZIGN. ALL SUCH DESIGNS AND INFORMATION ARE SUBMITTED IN CONFIDENCE AND ARE NOT TO BE PASSED TO OR DISCUSSED WITH A THIRD PARTY WITHOUT PRIOR CONSENT FROM LOGIC DEZIGN.

REV.	DESCRIPTION	DATE	CHK.	APR.
B	MINOR AMENDMENTS	05/10/26		
A	FIRST REVISION	01/09/26		

ARCHITECTURAL SERVICES
87 KIRKBY ROAD
BARWELL, LEICS.
LE9 8FR

WWW.LOGICDEZIGN.CO.UK
SDAVENPORT@LOGICDEZIGN.CO.UK
ENQUIRIES@LOGICDEZIGN.CO.UK
TEL:–07966285908

CLIENT:–	MR S.LLOYD
ADDRESS:–	PECKLETON ROAD KIRBY MALLORY LEICESTERSHIRE LE9 7QH
SUBJECT:–	SOAKAWAY DETAILS
DWG No:–	LD0047/PL/008

A3

SOAKAWAY DETAILS
SCALE N.T.S.

LOGIC DEZIGN
ARCHITECTURAL SERVICES