NOTE

THE GLASSHOUSE IS TO BE ASSEMBLED USING THE MANUFACTURERS INSTRUCTION MANUAL.

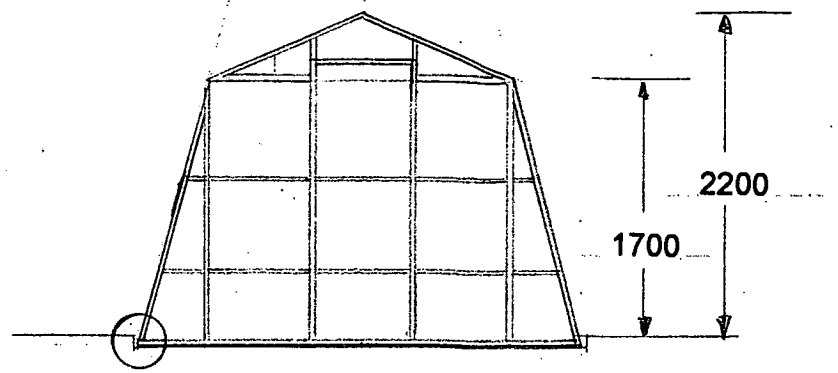

SEE DETAIL "A"
FRONT ELEVATION

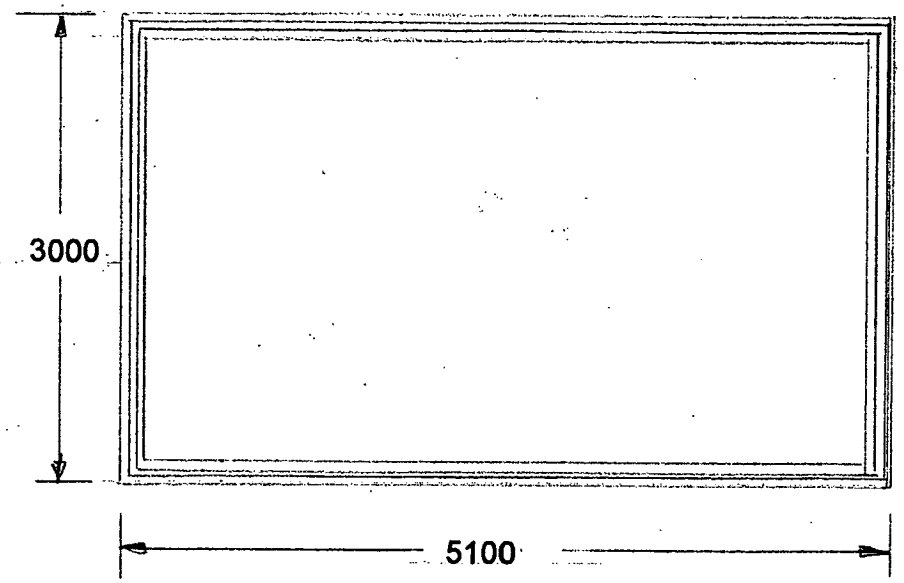

PLAN

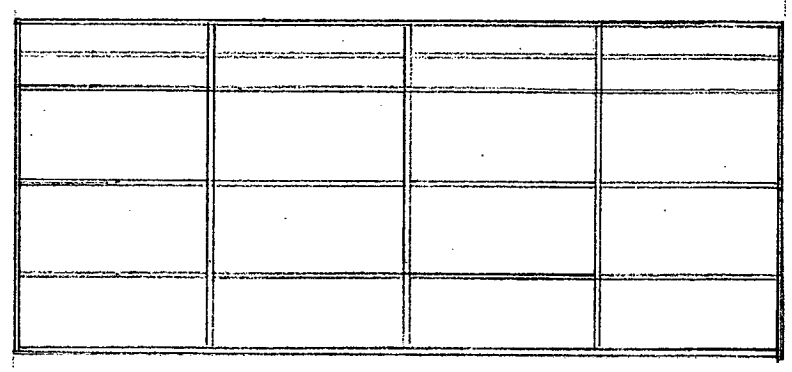

SIDE ELEVATION

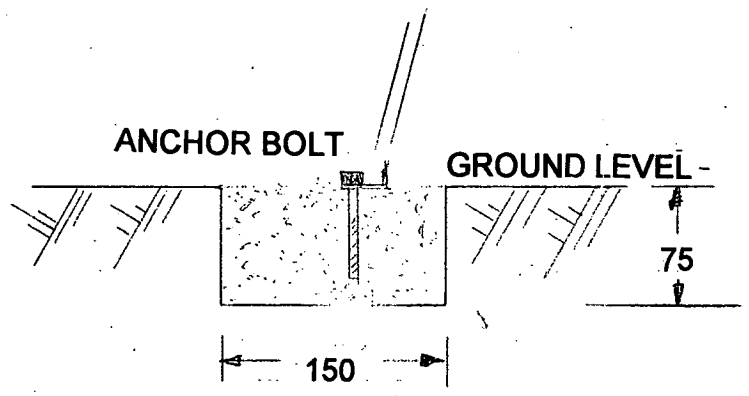

DETAIL "A"

PLANNING PORTAL REF
No PP-00365489
ORIGINAL DRAWING SIZE
A3

Dingley Technical Services
3 St Mary's Court
Barwell
Leics
LE9 8DF
Tel: - 01455842789

GLASSHOUSE FOR : -
MR F FURNIS
HILL TOP FARM
3a MAIN STREET
THORNTON
COALVILLE
LEICS
LE67 1AF

DATE	DIMMS	SCALES
11-02-08	mm	1 : 5 1 : 50

DRAWING No FF1083