Proposed alteration to
15 Woodland Avenue Burbage

22nd February 2008

Contents

Specification

- Specification 1
- Specification 2

Drawings

- Drawing 01 Location Plan
- Drawing 02 Block Plan
- Drawing 03 Existing Ground Floor Plan
- Drawing 04 Proposed Ground Floor Plan
- Drawing 05 Existing First Floor Plan
- Drawing 06 Proposed First Floor Plan
- Drawing 07 Existing Rear Elevation
- Drawing 08 Proposed Rear Elevation
- Drawing 09 Proposed Section AA
- Drawing 10 Beam Detail

Supplementary data

- Structural steel
- Thermal data 1
- Thermal data 2

Proposed alteration to
15 Woodland Avenue Burbage

15th February 2008

Specification

- **General brief:**

  Ground floor existing kitchen, utility room to be completely stripped to bare brick and ceiling joist, rewired & refurbished.
  Existing kitchen floor to be excavated, DPM inserted & insulated to same specification as all new build.
  Ground floor WC & store to be demolished.

  Proposed ground floor to incorporate dining area with open access to kitchen, and utility area with integral WC.

  Outhouse constructed with roller shutter door at each end to facilitate access to rear of property.

  First floor bathroom window to be reduced in depth.
  Master bedroom to be extended with dormer link to form additional wardrobe space & accommodate small office desk area, with feature picture window.
  Proposed all windows to rear & side (downhill) elevations to be replaced with new UPVC double glazed units.

- **Air bricks**

  to be positioned below finished floor level and ducted to facilitate unrestricted ventilation to suspended lounge floor.
  Kitchen and utility to have high level air bricks installed at convenient location to be decided on site.
  Subject to advice from LA Building Control.

- **Brick (exposed corner feature only to match existing):**

  Wilnecote light / dark multi rustic.

Compressive strength	*65 N/mm^2*
Thermal conductivity	*0.79 W/mk*
Wall weight ±Ω	*217 kg/m^2*

- **Foundation & Floor slab concrete**

  Ready mixed “RC 30”
  Existing 215mm garden wall to be divided into three equal sections and underpinned. Both ends will be under pinned at the same time as new foundation concrete is poured. Middle section to be excavated & poured later.

Proposed alteration to
15 Woodland Avenue Burbage

15th February 2008

Specification

- **Dense block:**

  Locally sourced.

Compressive strength	*3.9+ N/mm^2*
Thermal conductivity Ω	*1.13 W/mk*
Wall weight Ω	*220 kg/m^2*

- **Lightweight Block:**

  Thermalite Turbo.

Compressive strength	*2.9 N/mm^2*
Thermal conductivity	*0.15 W/mk*
Wall weight	*70 kg/m^2*

- **Roof slate:**

  Sandtoft Britslate

Thermal conductivity	*0.35 W/mk*
Weight	26.8 k*g/m^2*

- **Steel Beams**

  Though the table suggests 152*89*16UB It is my intention to use 203*133*30UB since I have them available. To be placed and secured as detailed in the "Structural Steel" subsection of this document.

- **Sun tunnel:**

  Velux (U value 2.2Wm^{2}K)

Proposed alteration to:
15 Woodland Avenue Burbage, Hinckley.

23 February 2008

Location Plan



Location Plan

Dwg No- 01 - 101206 Not to Scale Peter C Flavel, BSc Hons 01455 450710, 07880 953932

Proposed alteration to:
15 Woodland Avenue Burbage, Hinckley.

23 February 2008

Block Plan

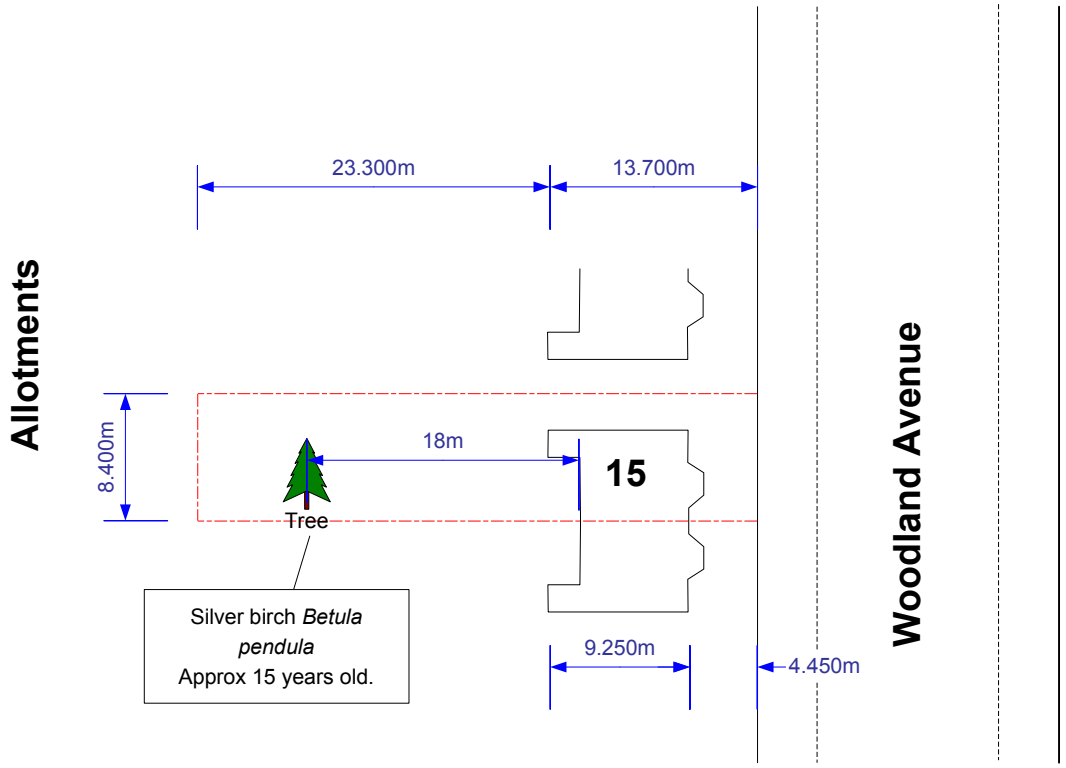

Block Plan

Dwg No 02 - 101206 Scale 1:500 Peter C Flavel, BSc Hons 01455 450710, 07880 953932

Proposed alteration to:
15 Woodland Avenue Burbage, Hinckley.

23 February 2008

Existing Ground Floor Plan

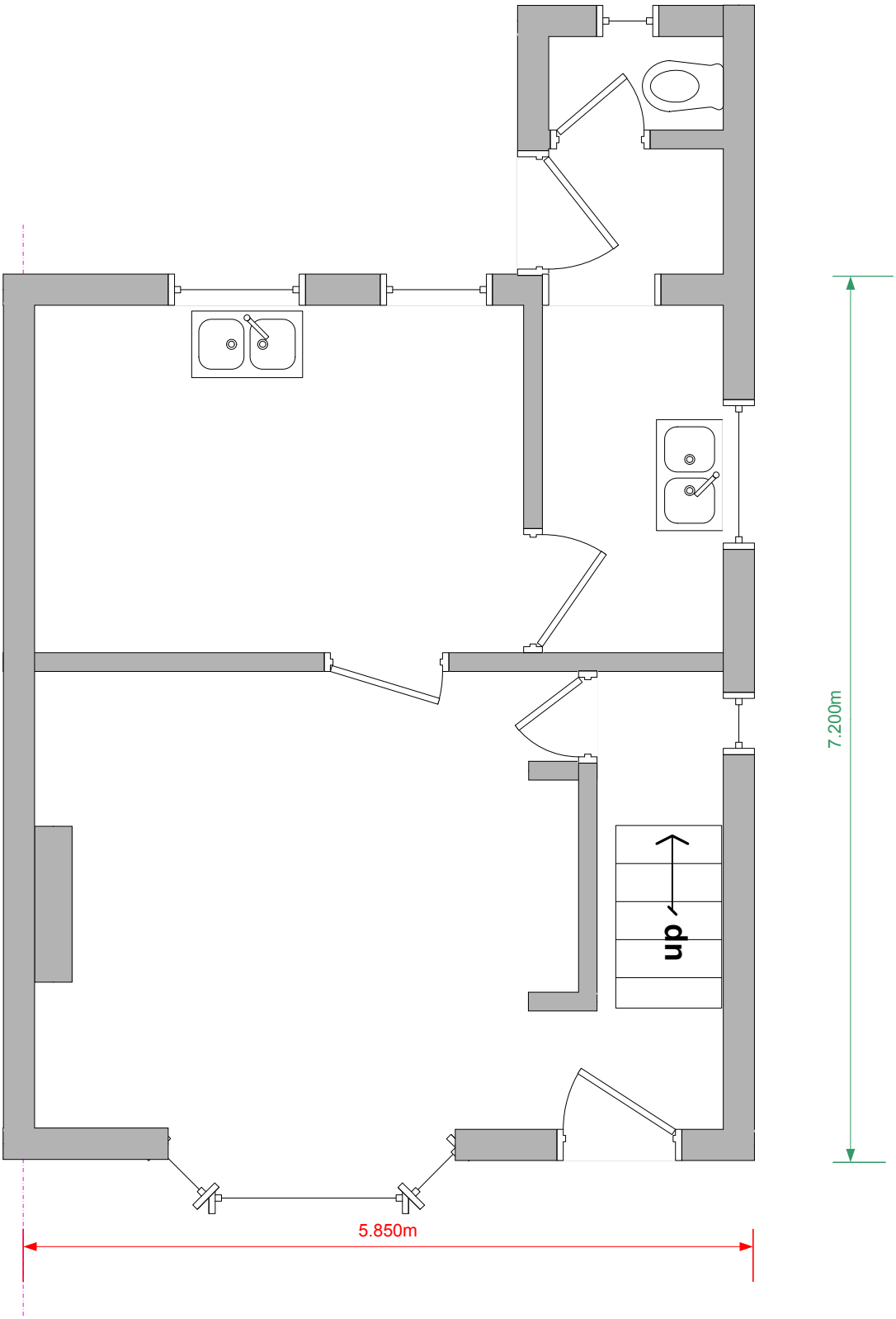

Existing Ground Floor Plan

Dwg No- 03 - 101206 Scale 1:50 Peter C Flavel, BSc Hons 01455 450710, 07880 953932

Proposed alteration to:
15 Woodland Avenue, Burbage, Hinckley.

23 February 2008

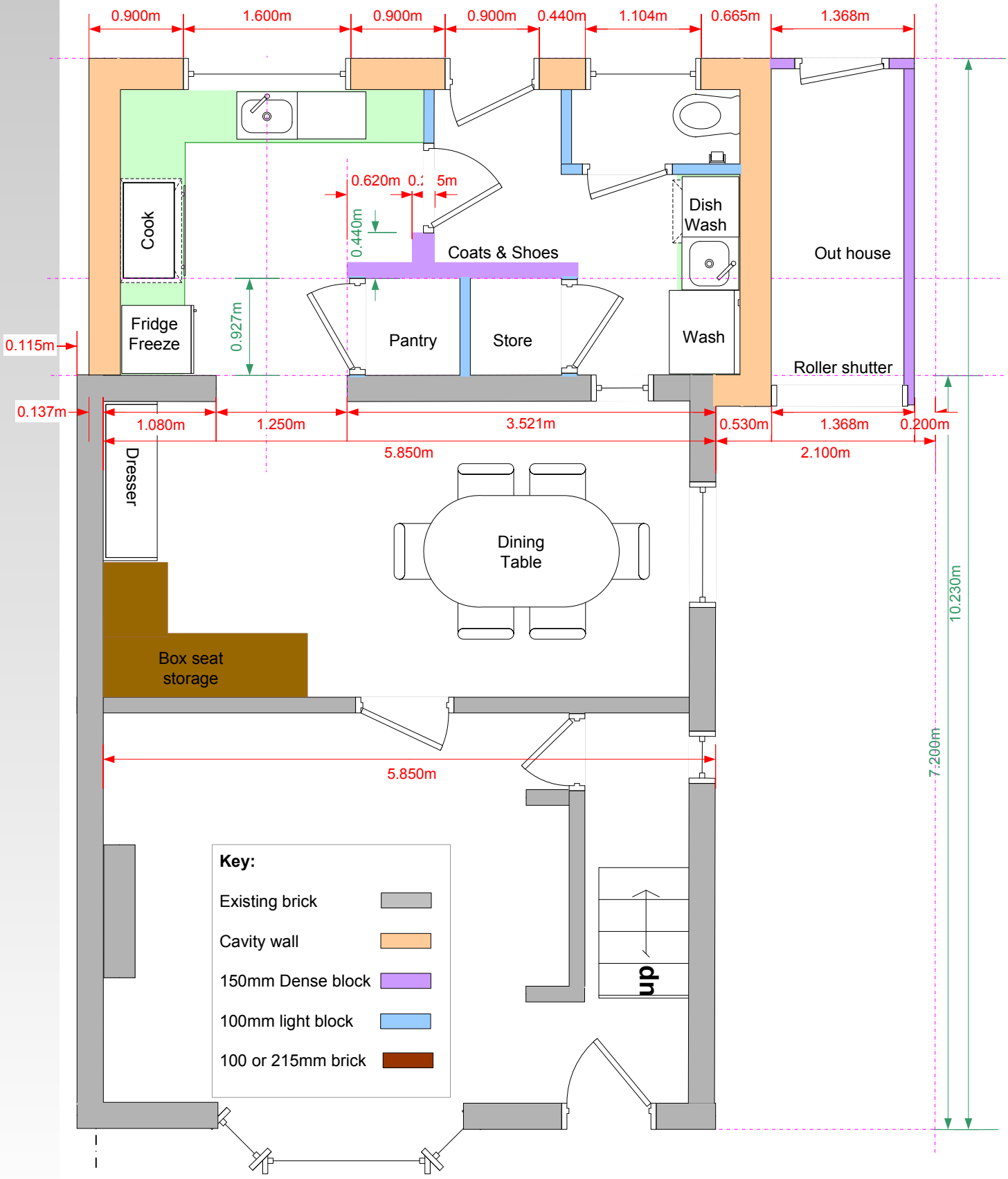

Proposed Ground Floor Plan

Dwg No- 04 - 200106 Scale 1:50 Peter C Flavel, BSc Hons 01455 450710, 07880 953932

Proposed alteration to:
15 Woodland Avenue Burbage, Hinckley.

23 February 2008

Existing First Floor Plan

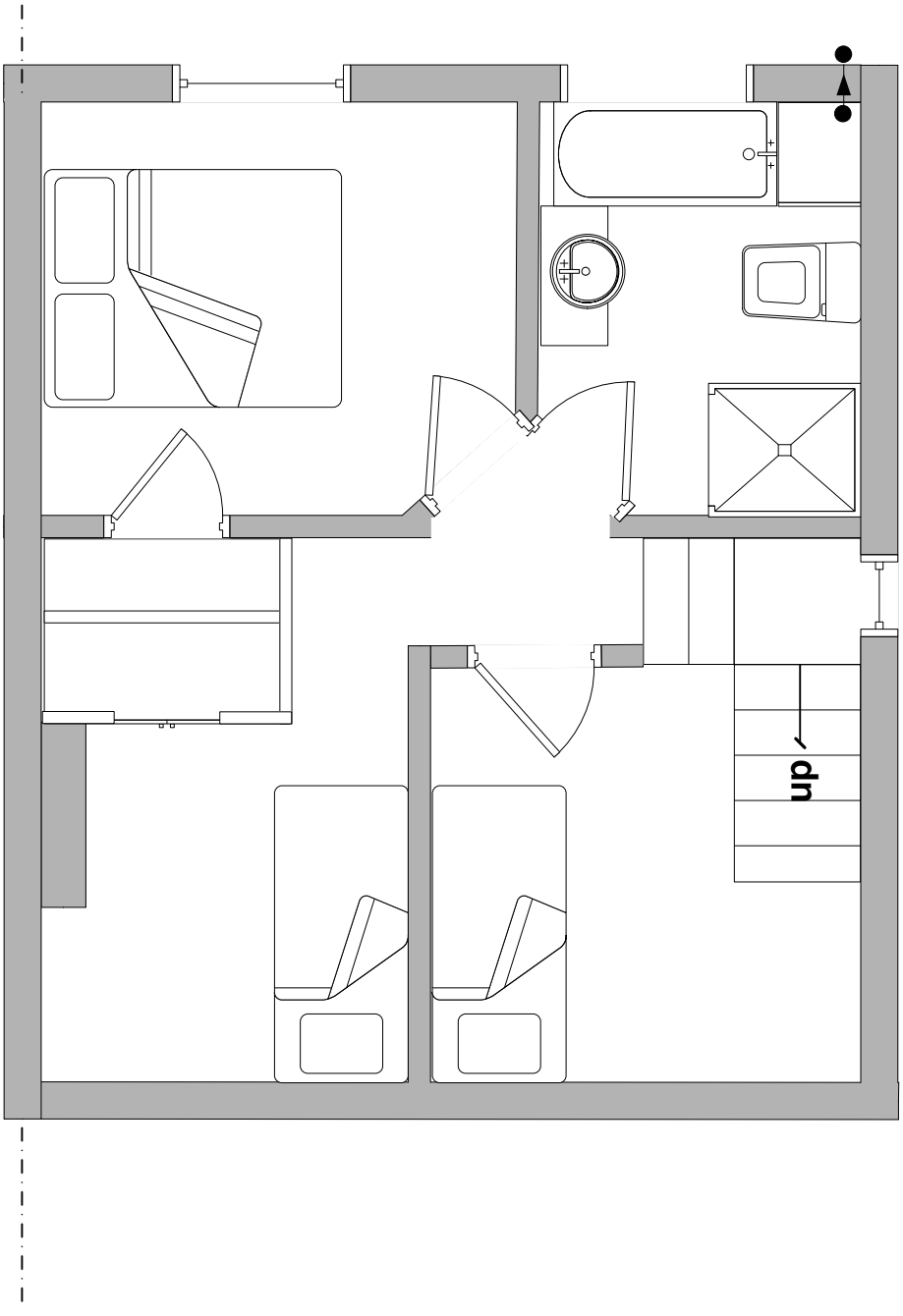

Existing First Floor Plan

Dwg No- 05 - 260108 Scale 1:50 Peter C Flavel, BSc Hons 01455 450710, 07880 953932

Proposed alteration to:
15 Woodland Avenue Burbage, Hinckley.

23 February 2008

Proposed First Floor Plan

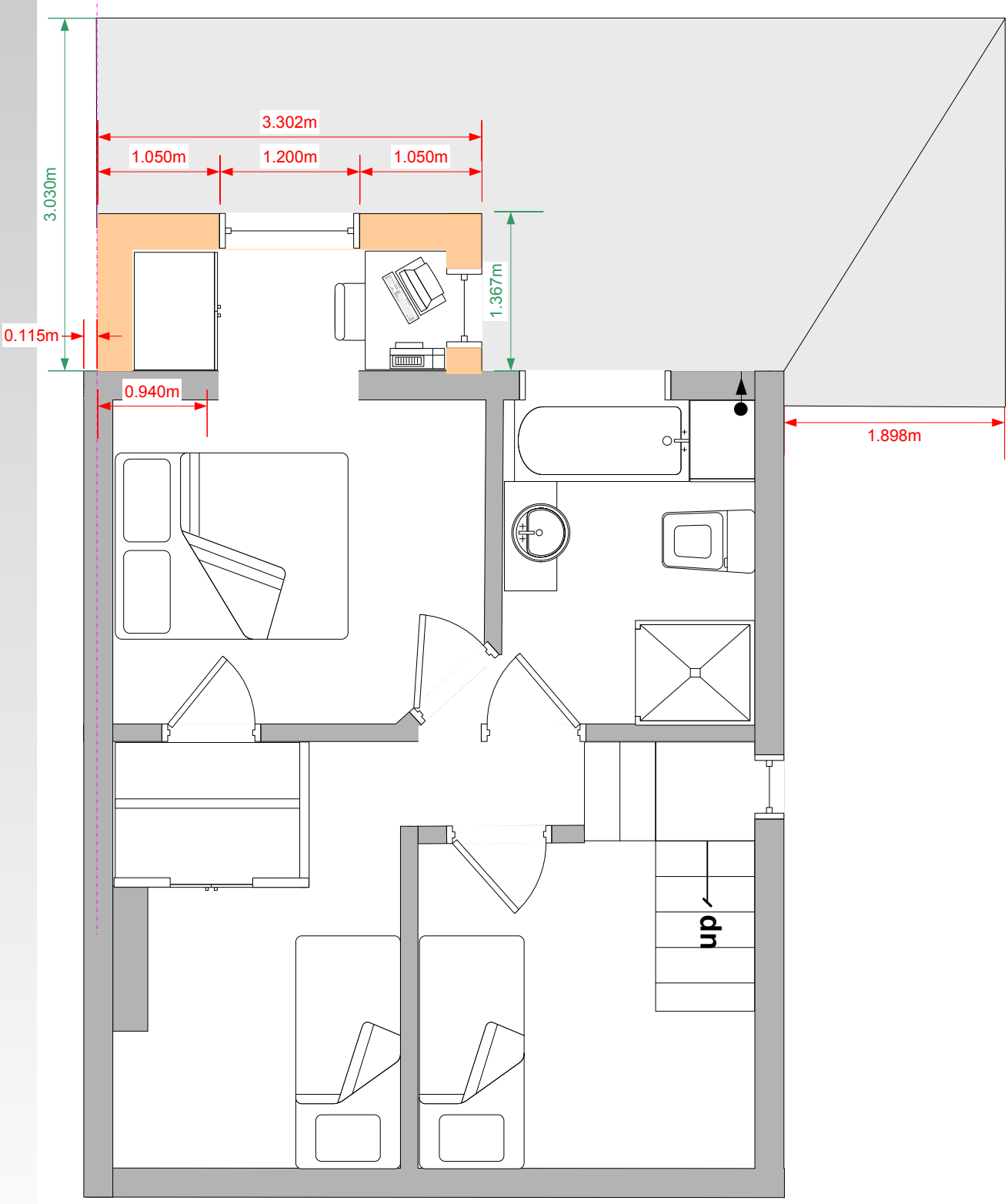

Proposed First Floor Plan

Dwg No- 06 - 260108 Scale 1:50 Peter C Flavel, BSc Hons 01455 450710, 07880 953932

Proposed alteration to:
15 Woodland Avenue, Burbage, Hinckley.

23 February 2008

Existing Rear Elevation

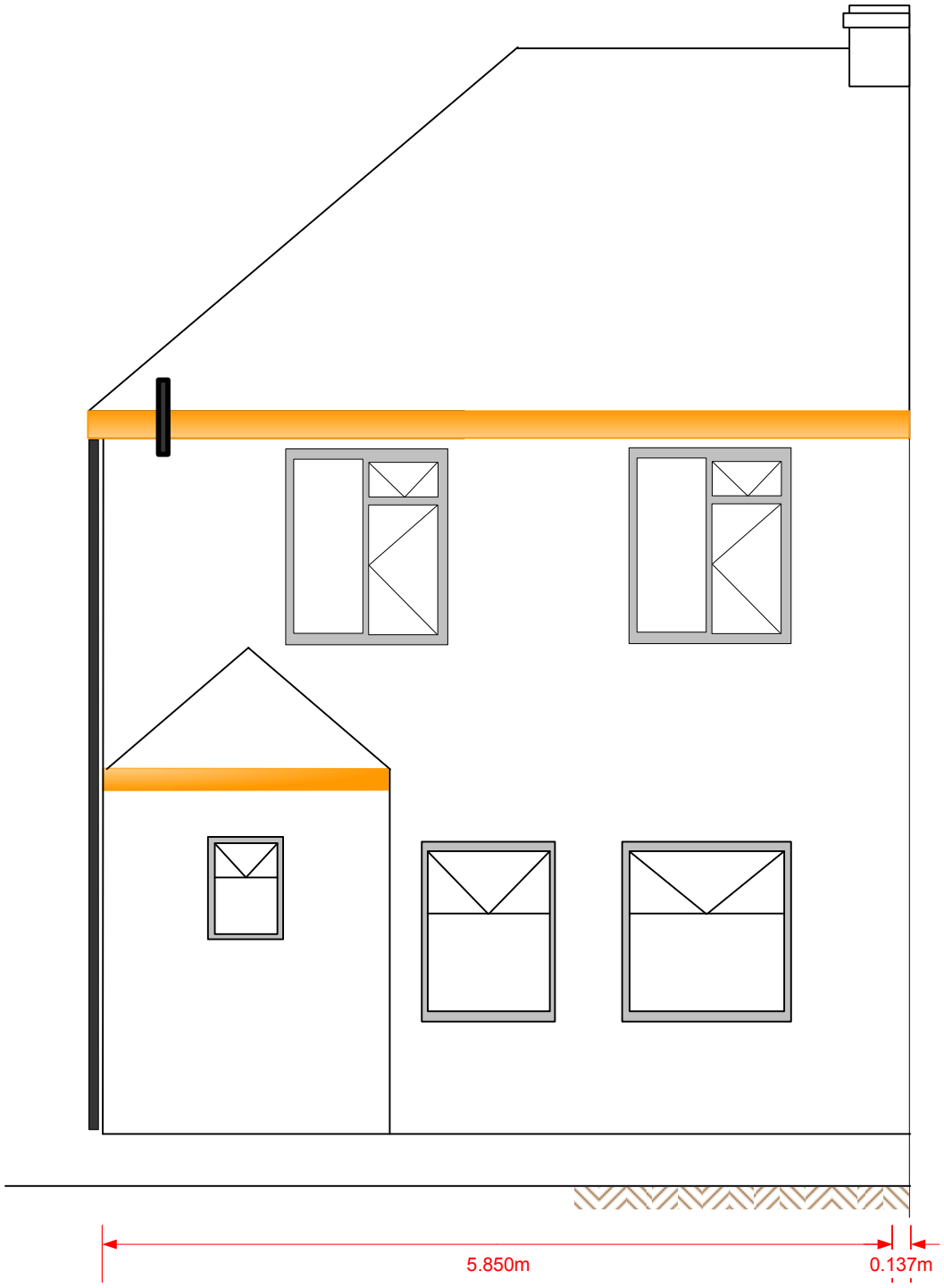

Existing Rear Elevation

Dwg No- 07 - 200108 Scale 1:50 Peter C Flavel, BSc Hons 01455 450710, 07880 953932

Proposed alteration to:
15 Woodland Avenue, Burbage, Hinckley.

23 February 2008

Proposed Rear Elevation

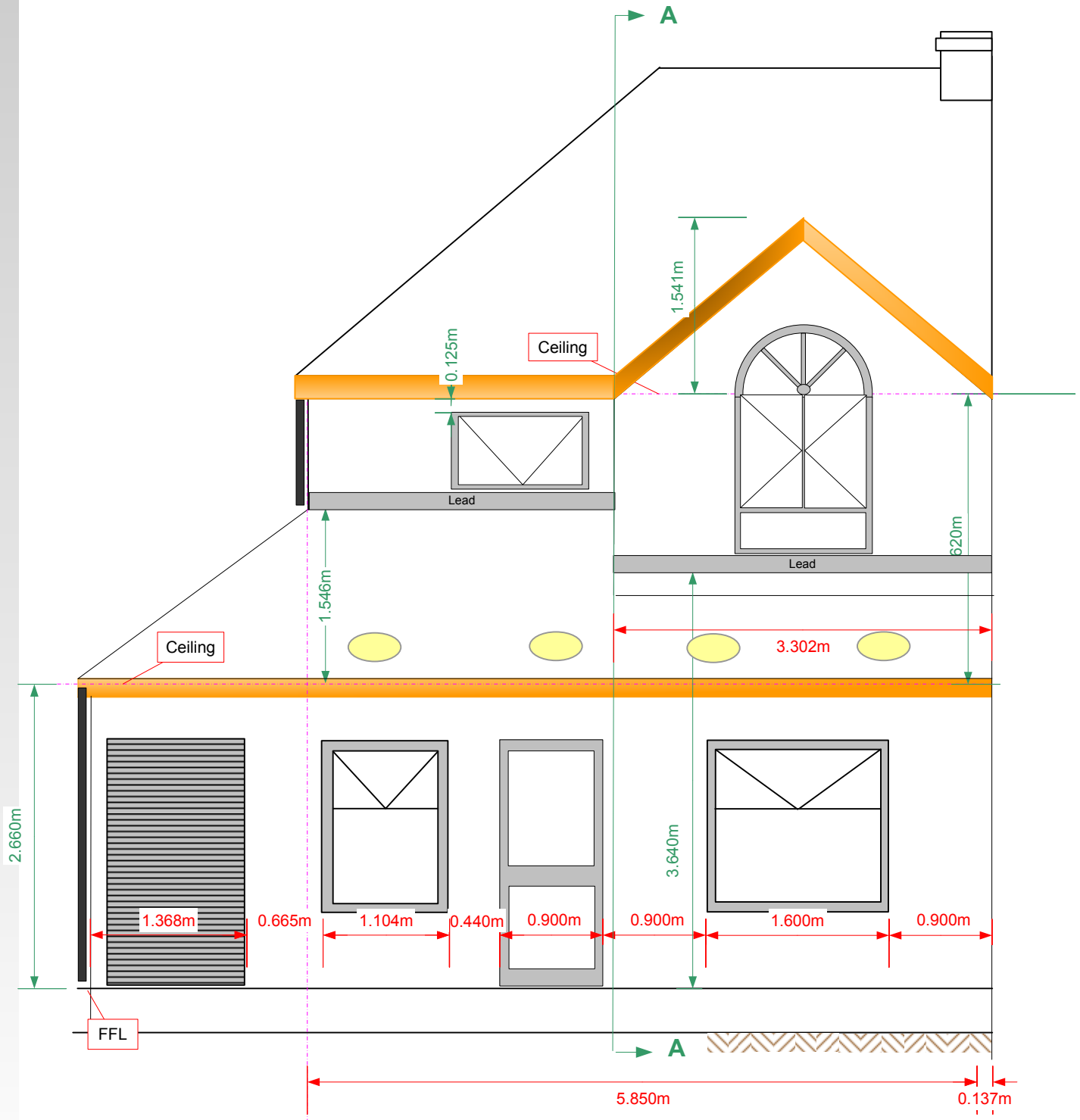

Proposed Rear Elevation

Dwg No- 08 - 020208 Scale 1:50 Peter C Flavel, BSc Hons 01455 450710, 07880 953932

Proposed alteration to:
15 Woodland Avenue, Burbage, Hinckley.

23 February 2008

Proposed Section AA

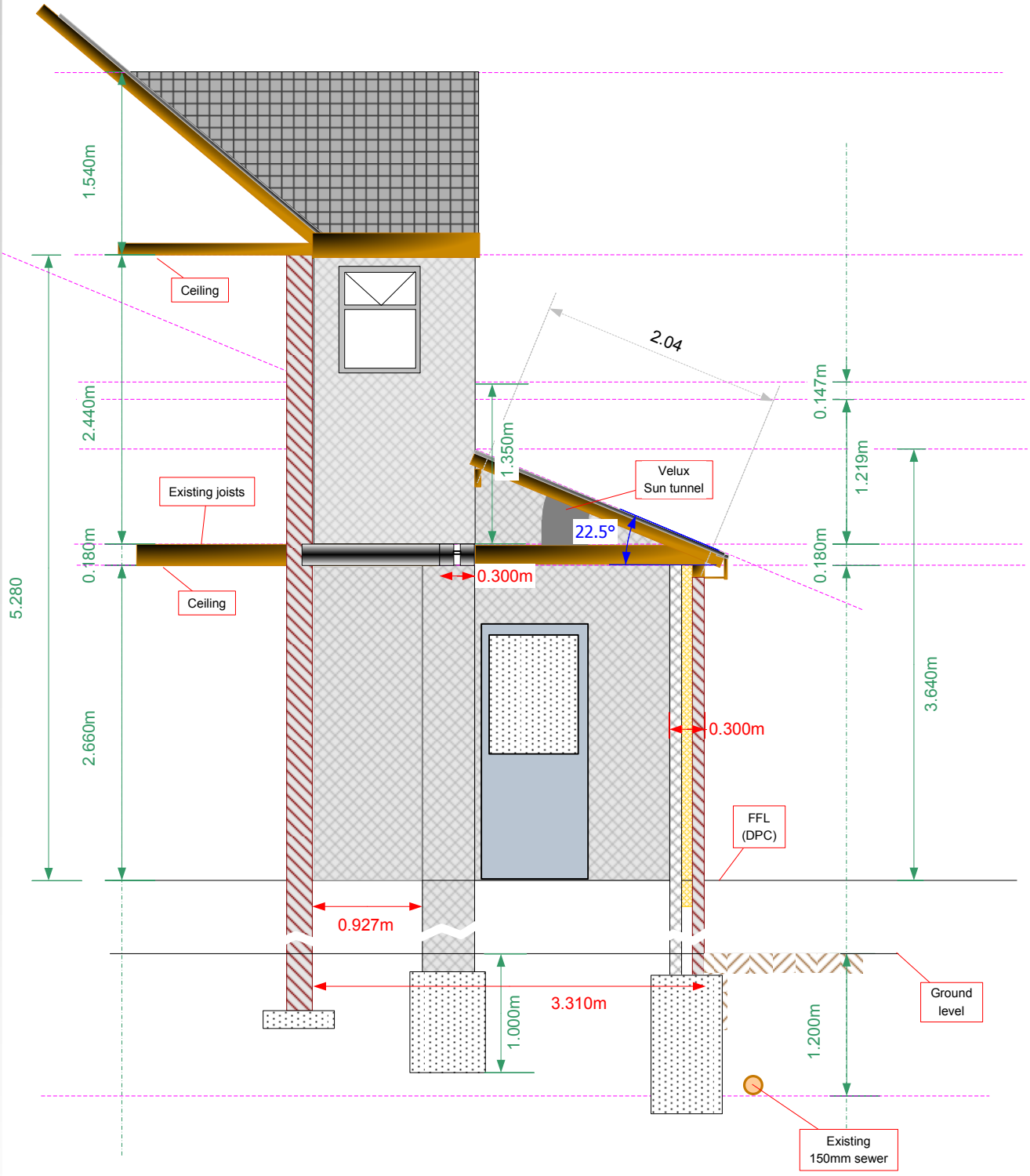

Proposed section AA

Dwg No- 09 - 200108 Scale 1:50 Peter C Flavel, BSc Hons 01455 450710, 07880 953932

Proposed alteration to:
15 Woodland Avenue, Burbage, Hinckley.

23 February 2008

Beam Detail

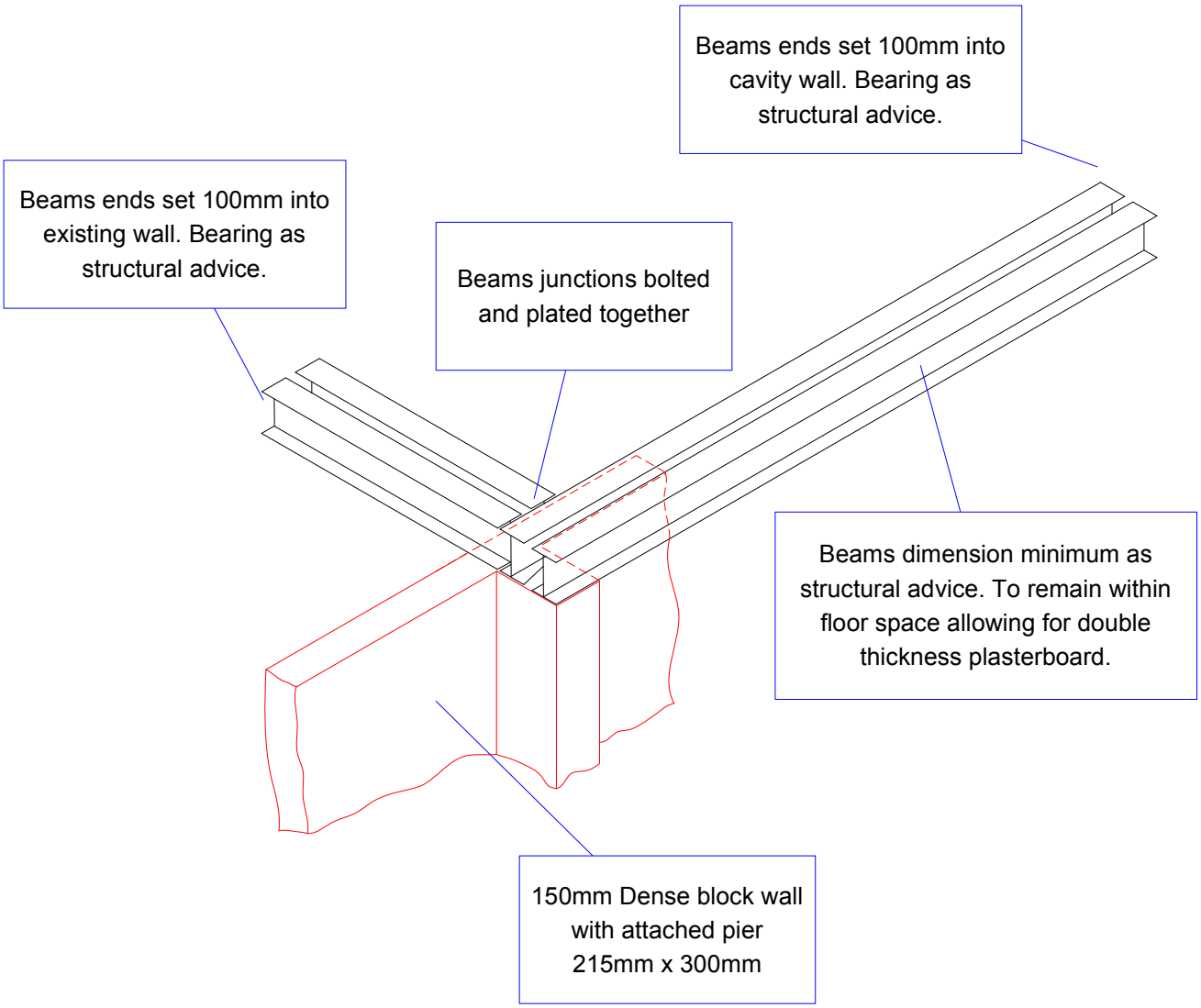

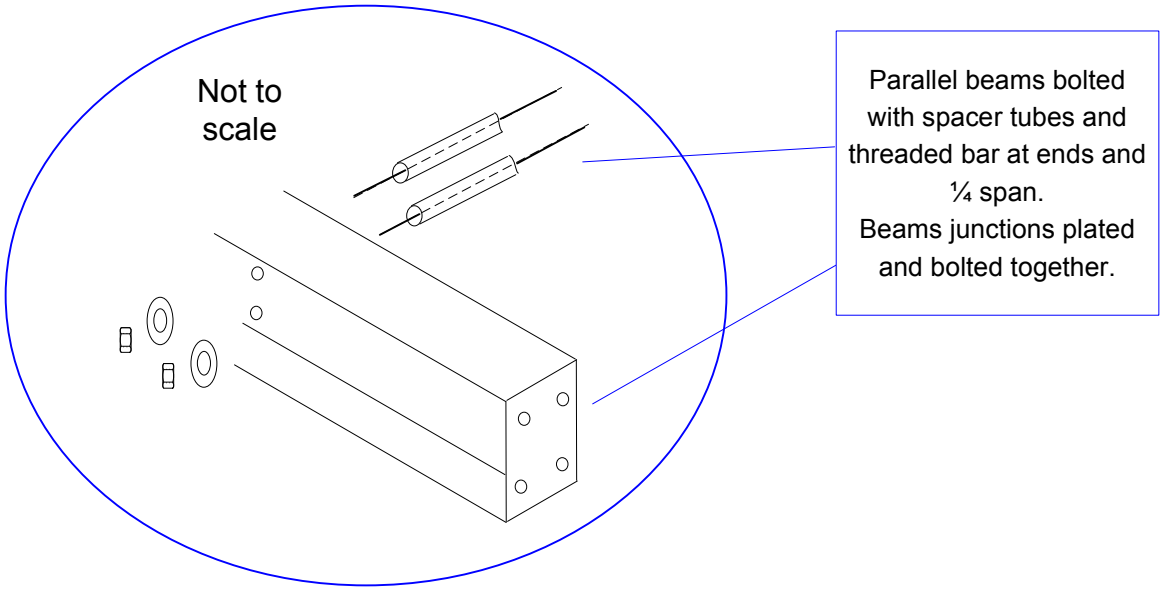

Beam detail

Dwg No- 10 - 080208 Scale 1:30 Peter C Flavel, BSc Hons 01455 450710, 07880 953932

Proposed alteration to
15 Woodland Avenue Burbage

13th February 2008

Structural steel

Beams to support first floor cavity wall, floor & roof.
See "Beam Detail Dwg No- 10

Span 2.800m

TYPE OF LOADING	SPAN OF BEAM (upto 3m)
100mm block wall max 2.4m high	127 x 76 UB
100mm brick wall max 2.4m high	127 x 76 UB
215mm/cavity wall max 2.4m high	2 No 127 x 76 UB
Roof ***or*** floor upto 3m span	127 x 76 UB
Roof ***or*** floor upto 5m span	152 x 89 UB
100mm brick or block wall max 2.4m high and floor ***or*** roof upto 5m span	203 x 102 UB
215mm or cavity wall max 2.4m high and roof ***or*** floor upto 3m span	2 No 152 x 89 x 16 UB
215mm or cavity wall max 2.4m high and roof ***or*** floor upto 5m span	2 No 178 x 102 x 19 UB
215mm or cavity wall max 2.4m high and roof and floor upto 5m span	2 No 254 x 102 x 22 UB

NOTE: Double beams should be bolted together at ends and ¼ span.
All beams should bear on concrete pad stone or 3 courses of engineering brick.

Proposed alteration to
15 Woodland Avenue Burbage

15th February 2008

Thermal calculations

Cavity Walls:

Requirement for new elements in an existing dwelling: 0.3 W/m^{2}k

New cavity wall comprising 15mm external sand cement render, 100mm dense concrete block, 100mm full thickness “Isover Hi Cav 32” cavity wool or similar, 100mm Thermalite Turbo & 15mm traditional brown & skim plaster.

Exterior  Interior

$$U = \frac{1}{RSi + RSo + \frac{L1}{K1} + \frac{L2}{K2} + \frac{L3}{K3} + \frac{L4}{K4} + \frac{L5}{K5}}$$

$$U = \frac{1}{0.123 + 0.053 + \frac{0.015}{0.53} + \frac{0.1}{1.13} + \frac{0.1}{0.032} + \frac{0.1}{0.15} + \frac{0.015}{0.4}}$$

U = 0.243 W/m^{2}k

Proposed alteration to
15 Woodland Avenue Burbage

15th February 2008

Thermal calculations

Pitch roof

Requirement for new elements in an existing dwelling
(pitched roof insulated between rafters). 0.2W/m^2k

New roof & dormer link roof comprising Reconstituted slate, sarking "felt" & 100mm "Isover spacesaver +" or similar.

Pitched roof with insulation following rafters	U = 0.2W/m^2k	80mm Styrofoam between rafters with a further 80mm Styrofoam fixed across face. to give a total thickness of 160mm or 100mm Kingspan Thermapitch TP10 between rafters with a further 37.5mm Kingspan Thermawall TW56 fixed across the face.