DISCONS

Lime Technologies

LIME NLX NOISE LIMITER

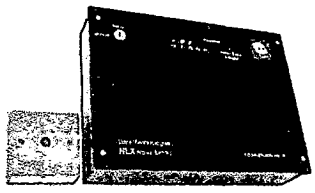

CONNECTION INFORMATION

1. INITIAL POWER UP
On initial power up the timer / power indicator will flash and the OK indicator LED will illuminate. Due to certain installation conditions the T1 to T4 indicator LEDs may flash before returning to the OK indication LED. This unit is now ready for adjustment.

2. ADJUSTMENT
VR-1 Overall microphone gain. Adjust* accordingly to determine the desired decibel (dB) level required to trigger the unit.

3. FINE ADJUSTMENT
VR-2 High filter adjustment - this may be adjusted* if you require more or less sensitivity to high frequencies, IE. Vocals etc.
VR-3 Low filter adjustment - this may be adjusted* if you require more or less sensitivity to low frequencies, IE. Bass.

** ADJUSTMENT: ANTI-CLOCKWISE > LESS SENSITIVE / CLOCKWISE > MORE SENSITIVE.*

VR-5 Timer adjustment, normally set to 1.5 second intervals giving an overall time of approx 15 seconds. Interval steps can be set by observing the flashing power indicator LED. Once on plus once off = 1 clock pulse. 5 pulses = cut off, 5 more pulses to auto reset. 10 pulses = 1 complete cycle.

After triggering and the volume not being reduced, the unit will cut off power for the time you have preset and then reset.

KEYSWITCH
The keyswitch has two settings, Monitor and Active.

MONITOR - Allows the unit to monitor the music and flash the warning lights but it will not cut off the power if the preset level is met.

ACTIVE - The unit will assess the music and the power will be cut off if the preset level is met.

TERMINAL CONNECTIONS

MAIN PANEL CONNECTIONS:

M1 - MICROPHONE +
M2 - MICROPHONE - (EARTH/SCREEN)

ENSURE THAT SCREENED MICROPHONE CABLE IS USED TO CONNECT MIC TO M1 AND M2

NOTE: Connections A to D are low voltage drive outputs only, and are connected to corresponding connections on remote light display if fitted.

A - Traffic lights 0 volts (common)
B - Traffic lights red channel
C - Traffic lights yellow channel
D - Traffic lights green channel

FA1 - Fire alarm + 24 Volts dc input from any existing fire alarm system (usually nearest bell or siren)
FA3 - Fire alarm negative input

P1 - EARTH

RELAY PANEL CONNECTION (connected during manufacture)
J - Connects to J on main
K - Connects to K on main board
P2 - Connects to P2 on main board
P3 - Connects to P3 on main board

2CN1 30 AMP INPUT CONNECTOR:
L - 240 volt ac supply input live
N - 240 volt ac supply input neutral
E - Input earth

Note: it is recommended that the supply to CN1 is taken from a separate 30 amp RCBO/RCCD at the on site consumer unit.

Lime Technologies noiselimiters.co.uk

2CN2 30 AMP OUTPUT CONNECTOR:
L - 240 volt ac controlled output live
N - 240 volt ac controlled output neutral
E - Output earth

2CN3: LIVE, NEUTRAL AND EARTH CONNECTIONS TO TX1 PRIMARY (already connected)

Traffic light remote display (optional):
A, B, C, D - Connect to corresponding connectors on main panel



Note: The unit must be powered up and the microphone must be connected to ensure steady green OK LED otherwise no power is supplied to the output connector.

THIS UNIT SHOULD BE INSTALLED BY QUALIFIED PERSONS ONLY. ALL WIRING SHOULD CONFORM TO CURRENT REGULATIONS. ALL EARTH CONNECTIONS SHOULD BE MADE AND TESTED BEFORE USE. DISCONNECT SUPPLY BEFORE SERVICING.

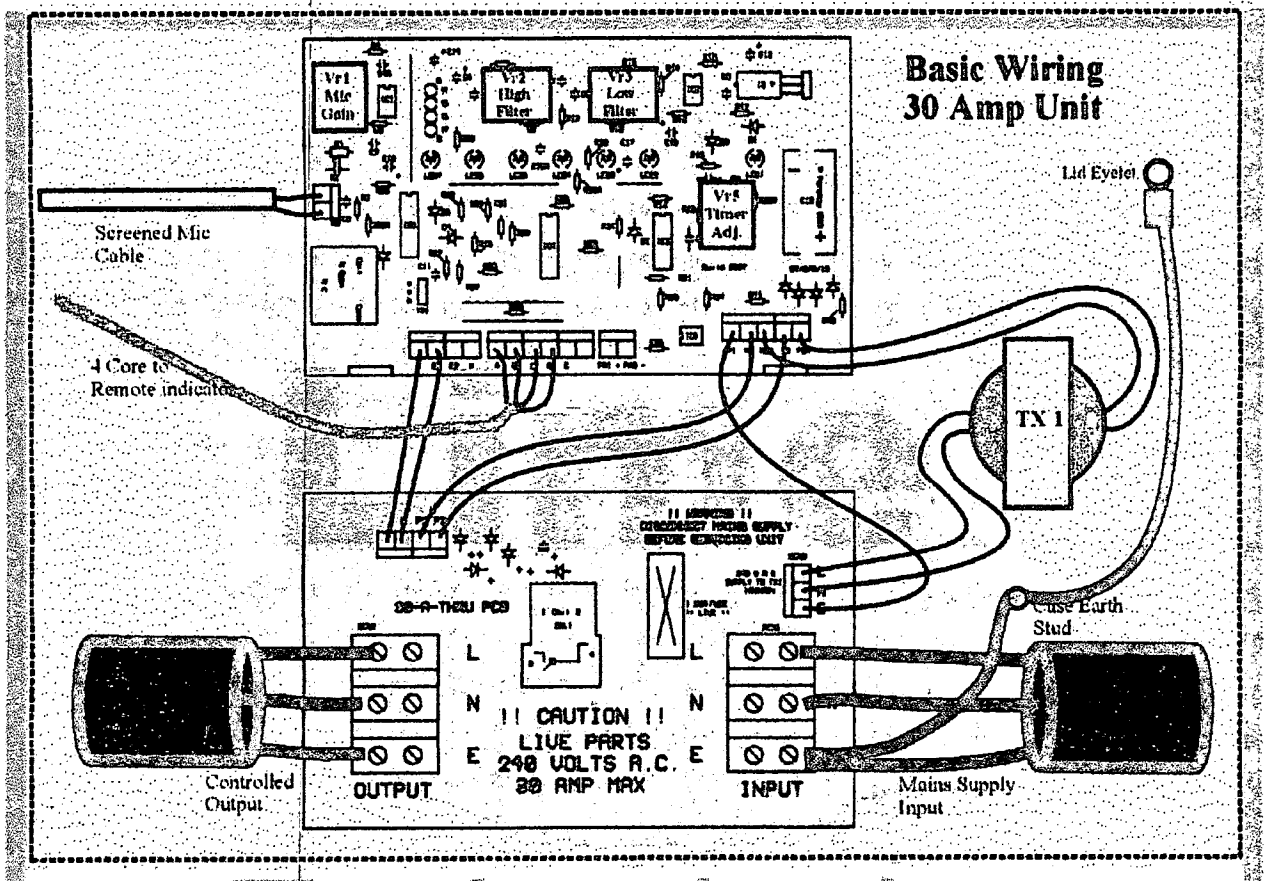

Technologies

• The Directive 2002/96/EC on Waste Electrical and Electronic Equipment (WEEE) which entered into force on 13th February 2003, is to ensure that WEEE is recycled using best available treatment, recovery and recycling techniques in order to protect human health and natural resources.
• Recycling & disposal
The WEEE logo (shown to the right) indicates that this product must not be disposed of in the general household waste bin.
Be sure to dispose of all your products in the designated collection facilities for recycling of such hazardous waste.
Separate collection and proper recovery of your WEEE at the time of disposal will allow us to help conserve natural resources. Moreover, proper recycling of WEEE will ensure the safety of human health and the environment. For more information about electronic and electrical waste equipment disposal, recovery, and collection points, please contact your local household waste disposal service, retailer or manufacturer of the equipment



Copyright © 2008-2011 Lime Technologies
UK

Email: support@noiselimiters.co.uk
Web: noiselimiters.co.uk