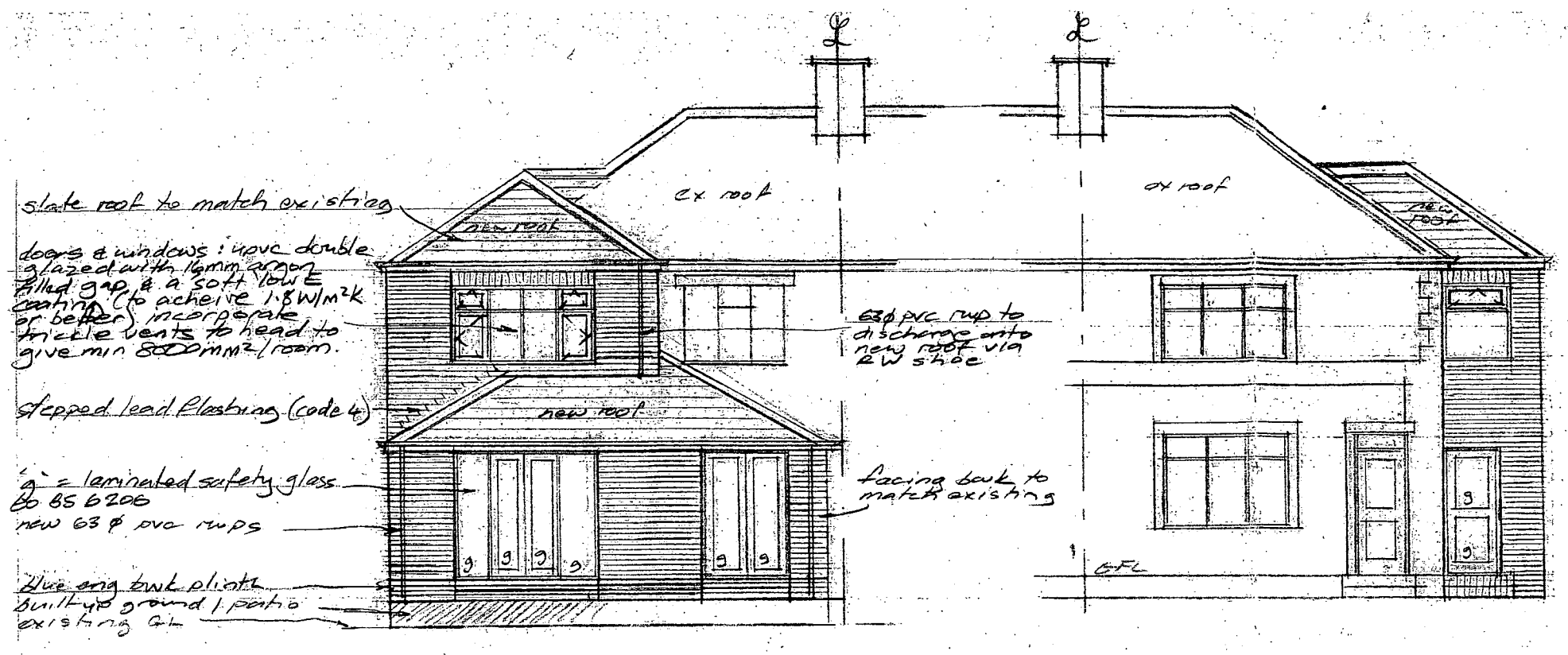

Proposed Rear

Proposed Front

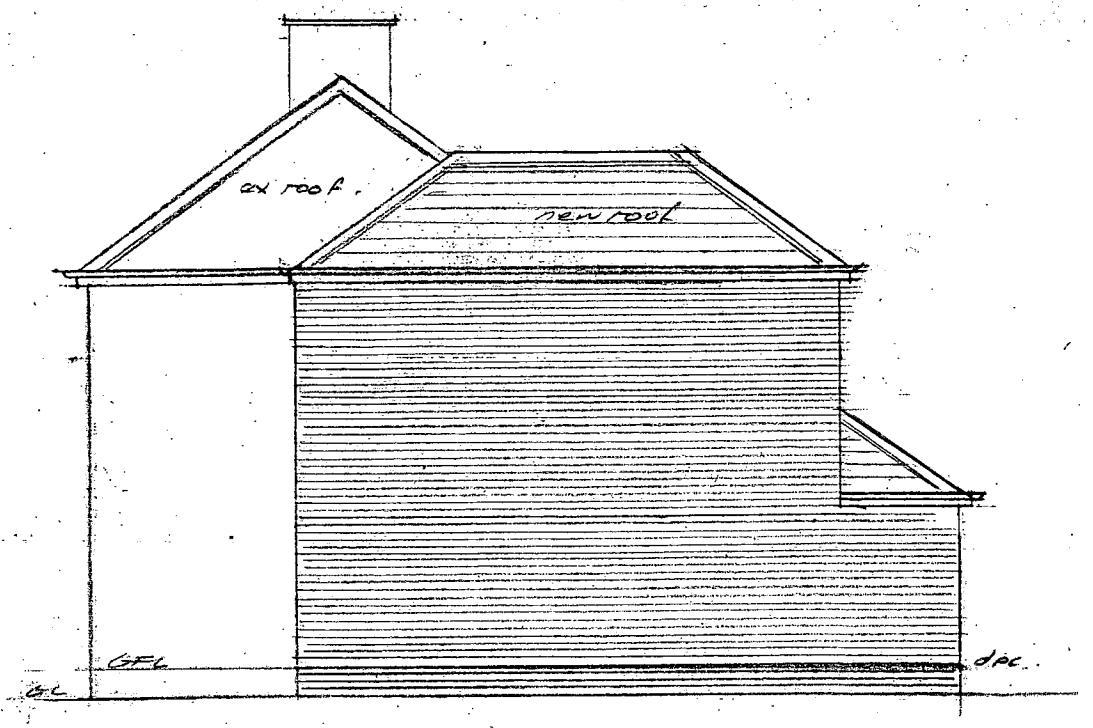

Proposed Side

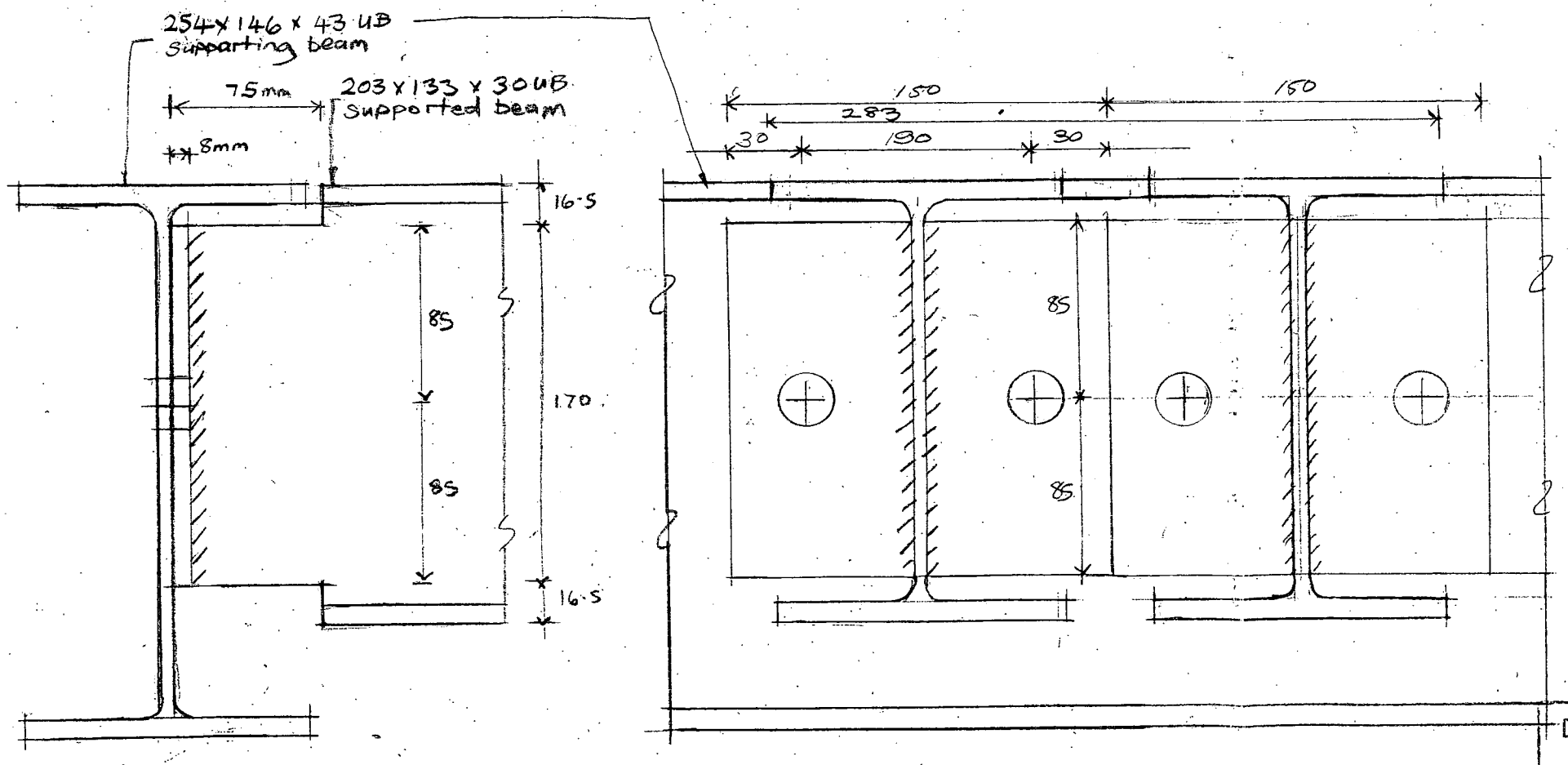

End plate 1/150 x 190 x 8 mm drilled for 2 holes 22 ϕ
All bolts to be M20 grade 8·8
Electrodes to BS639 grade E43
Sections & plates to be grade S275

Connection Detail (NTS) alternatively sit supported beams on top of supporting beam & bolt down to same.

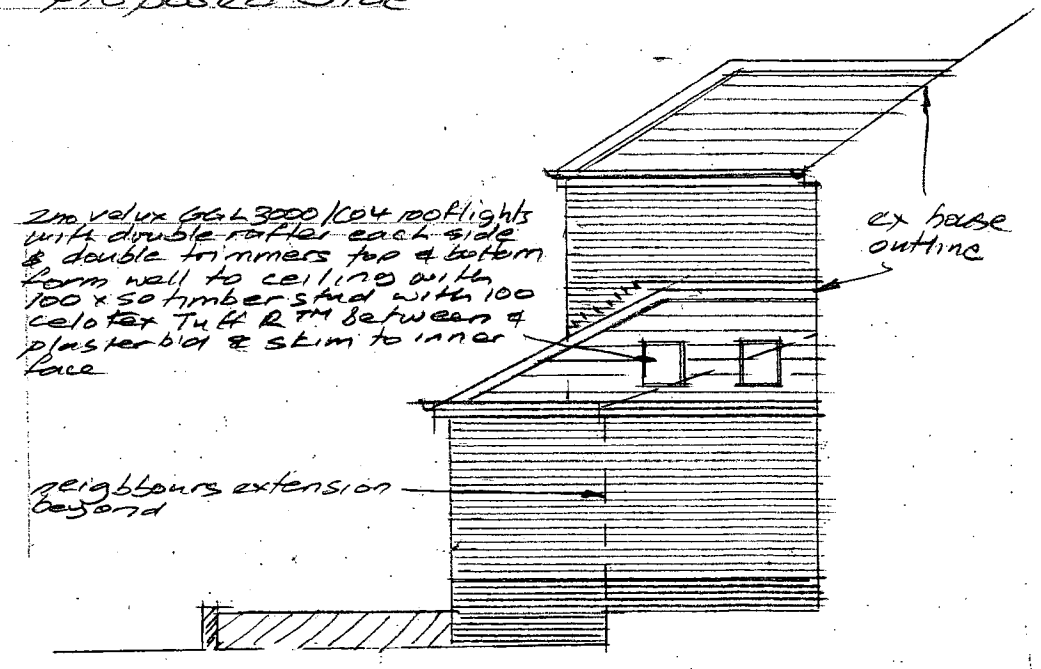

Proposed Side

Please note: Ground Floor already approved for Planning & Regs & already started up to dpc level.

DEVELOPMENT SERVICES
24 MAR 2009
RECEIVED

a. 4/3/09 FF extension reduced in depth 1·5m. Detail added

Martin S Dennis
Architectural Technician
10 Wesley Close
Sapcote LE9 4HH
Tel 01455 272275

Proposed First Floor Rear & Side Extension over Existing Ground Floor Extension
35 Woodland Ave
Burbage
For Mr & Mrs McKetterick

scale 1:100
date 12/2/09
dwg no M.11.53.12a