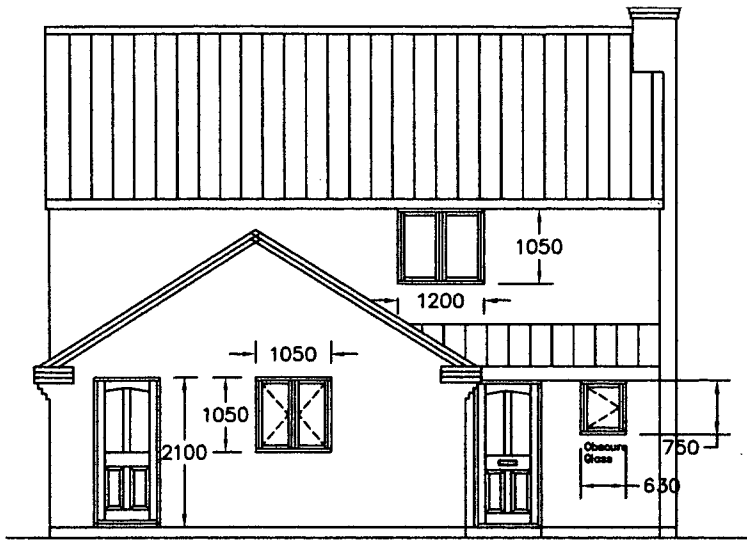

West Elevation

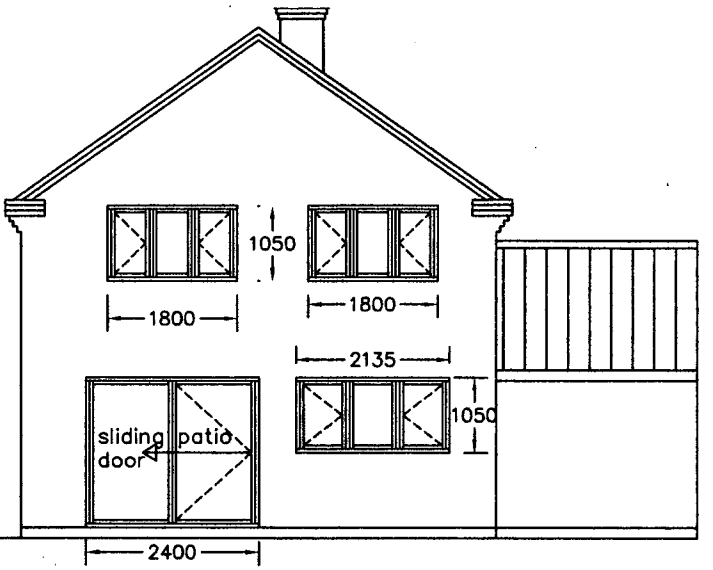

North Elevation

BRICKS
BAGGERIDGE TUSCAN RED MULTI
ABOVE 3 COURSES OF BLUES

ROOF TILES
REDLAND REGENT SLATE GREY

WINDOWS AND DOORS
WHITE UPVC

GUTTERS
BLACK HALF ROUND PLASTIC

FASCIA AND SOFFIT
WHITE UPVC

FENCE BETWEEN NEW HOUSES
CONCRETE POSTS & GRAVEL BOARDS,
FEATHEREDGE PANELS.

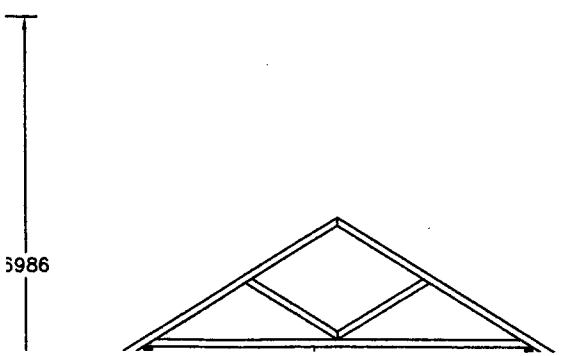

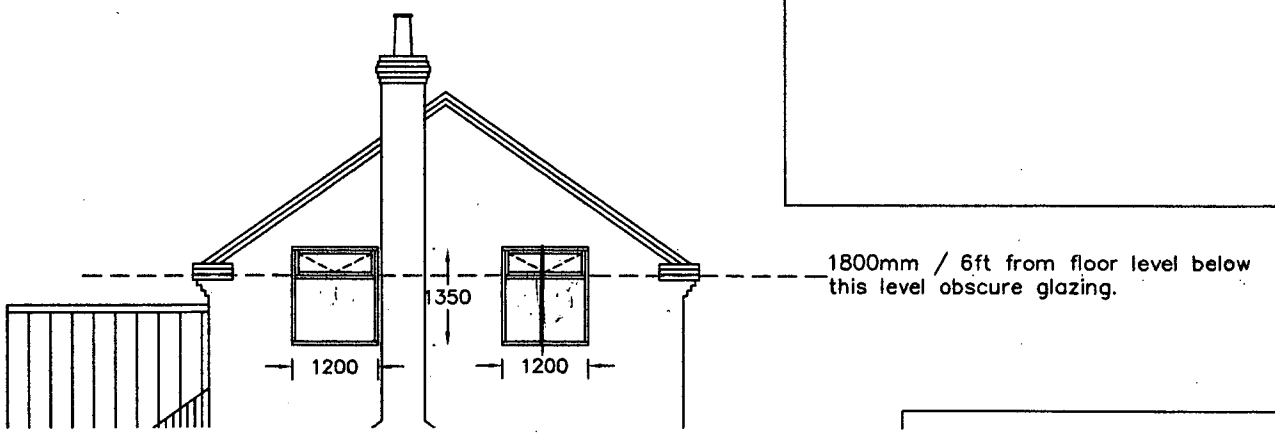

South

DEVELOPMENT
SERVICES

15 SEP 2011

RECEIVED