

East Elevation

West Elevation

Side Elevation

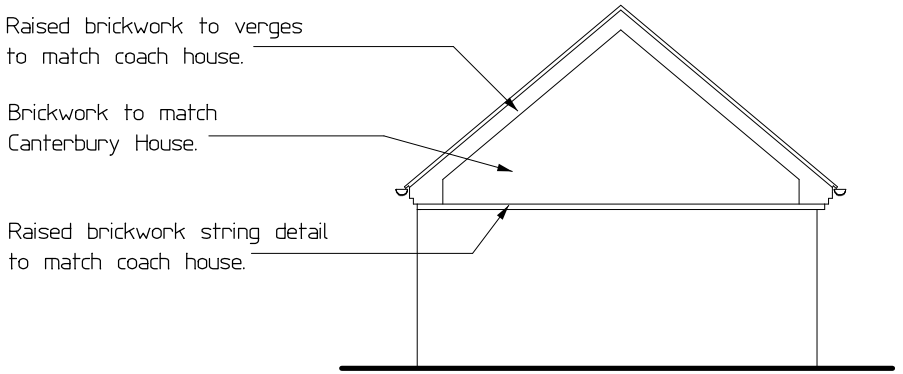

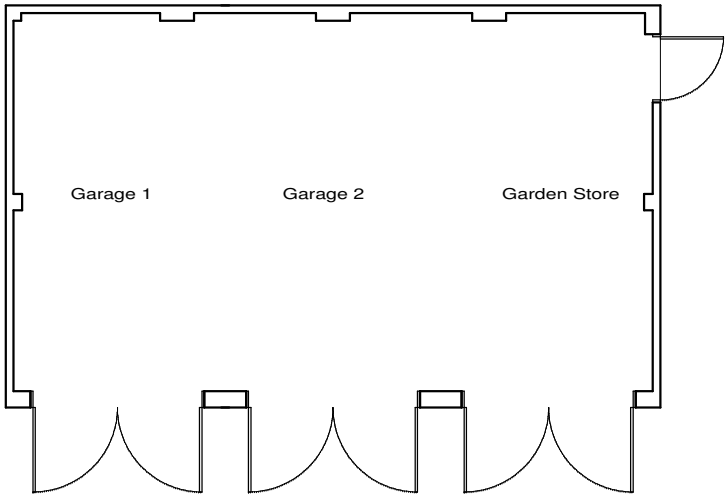

Side Elevation

5 4 3 2 1 0 5

S A V A G E H A Y W A R D
A R C H I T E C T S
19 Station Rd Hinckley, Leicstershire, LE10 1AW, 01455 635665, FAX- 01455 618971

Client Mr & Mrs Summerfield		Drawing GARAGE DETAILS	
Project Proposed Garages Canterbury House Higham on the hill	Auth LJW Scale 1 : 100	Date Feb 2009 Job No 08/99	Drawing No 07

THIS DRAWING IS THE COPYRIGHT OF SAVAGE HAYWARD REPRODUCTION IN ANY FORM OF WHOLE OR PART IS FORBIDDEN WITHOUT PRIOR WRITTEN PERMISSION OF THE COPYRIGHT HOLDER DO NOT SCALE FROM DRAWING AND ONLY FIGURE DIMENSIONS ARE TO BE USED