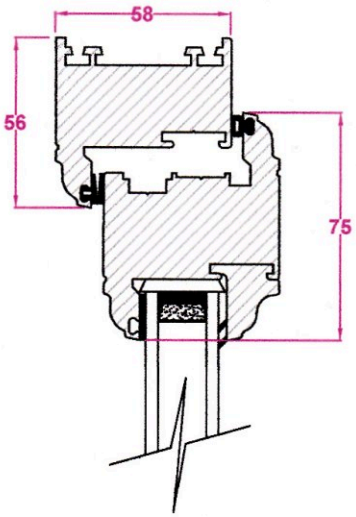

SECTION THROUGH HEAD OF A
uPVC CASEMENT WINDOW (SCOTIA)

INSIDE

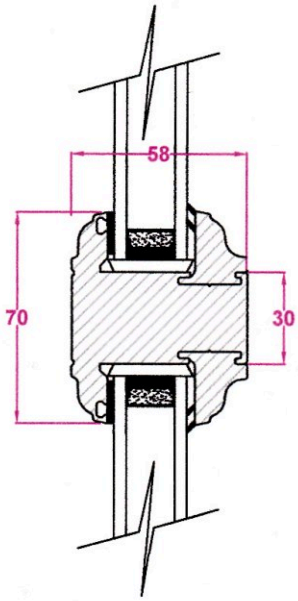

OUTSIDE

SECTION THROUGH A TRANSOM OF
OF A uPVC CASEMENT WINDOW (SCOTIA)

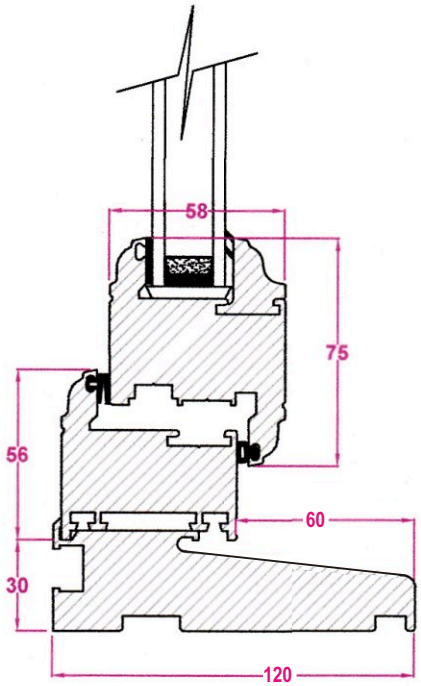

SECTION THROUGH BOTTOM OF A
uPVC CASEMENT WINDOW (SCOTIA)