Environmental

DEVELOPMENT SERVICES

14 MAY 2009

RECEIVED

TITAN Septic Tanks Instructions

Titan Environmental are the largest rotational moulder in Ireland. They are a company whose name is synonymous with excellent design, high quality and performance.

Titan septic tanks are made from the finest quality polyethylene and are guaranteed for ten years' trouble-free use.

Titan's nationwide network of stockists ensures prompt delivery and complete after-sales service to every customer.

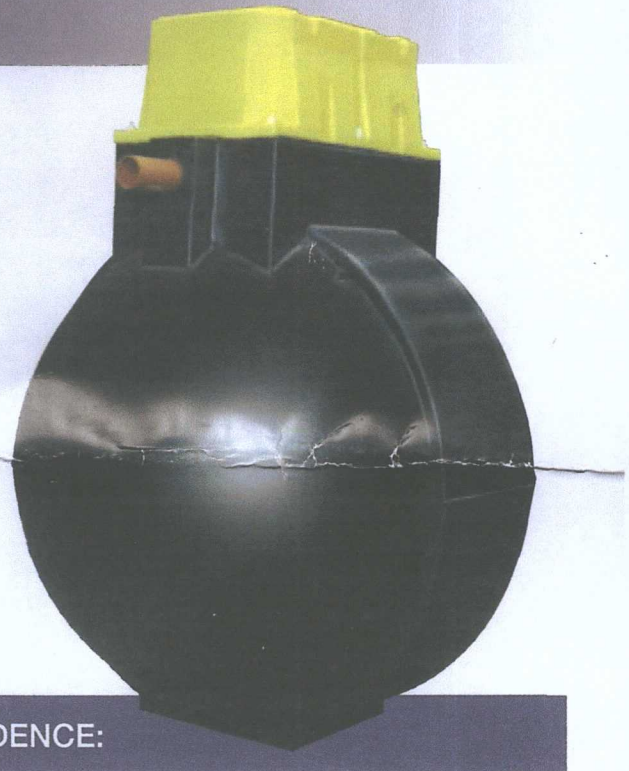

WHY YOU CAN INSTALL TITAN TANKS WITH CONFIDENCE:

- Titan septic tanks will save you money because they last longer, provided that the tank is installed and maintained in accordance with the manufacturer's instructions.
- They are robust, with high impact resistance and can withstand all common chemicals they are likely to encounter.
- Titan septic tanks are trouble-free. No chemicals are required for bacterial action to take place.
- Titan septic tanks are strong, easy to move and simple to install. Full installation instructions are supplied with every tank.
- An extension neck is available for deeper installation on difficult sites. (Please contact Titan Customer Service before using).
- Titan's modern design means that access for desludging is easier through the wide neck.
- Titan's septic tanks come in capacities of 2,730 litres (600 gallons) and 3,635 litres (800 gallons) and meet all the requirements of the Water Act Consent Regulations and Building Control Regulations in Great Britain and Northern Ireland. They were awarded a British Agreement Certificate – your assurance of quality – in October, 1990. (Titan have recently introduced a larger 4,540 litre (1,000 gallon) tank for those requiring greater capacity).
- All Titan tanks carry a ten year guarantee, provided that the tank is installed and maintained in accordance with the manufacturer's instructions.

Septic Tanks Instructions

SEPTIC TANK

Arrows show the flow path of the liquid

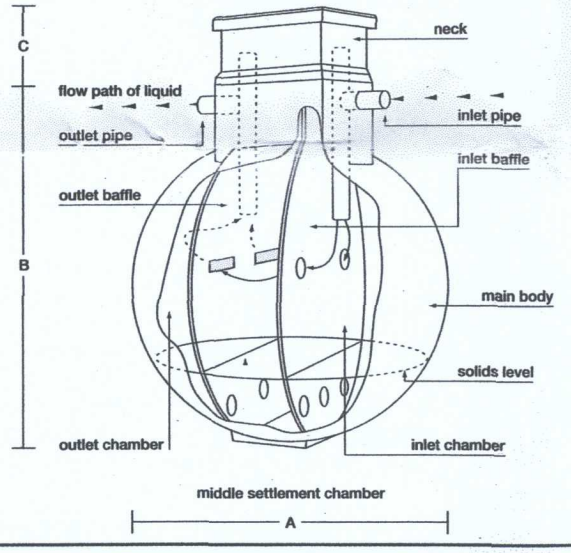

TANK DIMENSIONS			Dimensions may vary slightly
Litres/gallons	**A m/ft**	**B m/ft**	**C m/ft**
2730/600	1.76/5'9"	1.96/6'6"	0.46/1'6"
3635/800	1.94/6'3"	2.12/7'0"	0.46/1'6"
4540/1000	2.00/6'6"	2.37/7'10"	0.46/1'6"

Before you begin

Make sure you have obtained the necessary consent to discharge before you install a septic tank. You must therefore submit plans of the location of both the tank and the soakaway layout to your Local Authority, who may also be able to offer you advice if required.

Titan septic tanks comply with the principles set down in BS.6297:1983. The design also meets all the requirements of both the Water Act Consent and Building Control Regulations in Great Britain and Northern Ireland.

What about ground conditions?

Prior to installation, care should be taken to establish the depth to the water table and land drain facilities, as ground conditions will determine the type of backfill materials to be used. In dry, free draining soils where the ground is dry all year round, i.e. the water table never rises above the base of the tank, then use method of installation for DRY GROUND.

In clays, silts, heavy ground or badly drained ground where the water table rises above the base of the tank, use method of installation for WET GROUND.

Where should I site the septic tank?

British Standard code of practice BS.6297:1983 now recommends that septic tanks should not be closer than 15 metres from a dwelling. The outlet from the tank should be well away from any source of water supply. Care should be taken to site the tank a minimum distance of 2 metres from a road or driveway to avoid damage by heavy vehicles.

Don't forget that there must be access for service vehicles during installation and desludging.

If the tank can only be installed where it will be subject to a traffic load, then contact Titan Customer Service for details of any special requirements.

How should I handle the tank?

Care should be taken when handling the septic tank. The tank should only be lifted using a rope or sling passed through the lifting points provided on the tank. The tank must be carefully lifted from the delivery vehicle and set down onto level ground. Do not roll the tank off the delivery vehicle.

Carry out an inspection for any damage before accepting the tank and inspect again prior to installation, paying particular attention to the inlet and outlet pipes. During storage of the tank on-site, do not allow it to rest on these pipes at any time.

The tank should always be filled with clean water during backfitting. It is desirable to temporarily cover all openings in the tank to prevent the ingress of debris during installation.

What about excavation?

Installation should only be carried out by a competent contractor. The septic tank is supplied with a standard neck extension giving a cover of approximately 600mm (allowing 75mm for a manhole cover) from the top of the inlet pipe. An extension neck is available from the stockist to give an invert depth of 900mm if required.

It is recommended that where the invert depth of the inlet pipe exceeds 900mm the manufacturer should be contacted for technical advice.

Excavate a hole according to the table below. Normal safety precautions must be adopted during excavation. Excavate a trench for the inlet and outlet pipework noting that at the tank the cover to the inlet pipe is approximately 600mm, the outlet pipe is 25mm lower than the inlet pipe.

If the excavation is in unstable ground, take particular precautions to avoid a collapse of the sides of the excavation. Guidance on excavation to these depths and the safety measures required are given in BS.6031, BS.8000: Part 1 and HSE Construction Summary Sheet.

Make sure that any water collecting in the hole is pumped out during installation.

Litres/gallons	Excavate (mm)
2730/600	2000 x 2000 x 2000 below pipe
3635/800	2250 x 2250 x 2200 below pipe
4540/1000	2300 x 2300 x 2400 below pipe

What about desludging?

The neck of the Titan septic tank has been specifically designed to allow easy access to each compartment for ease of cleaning when required. The tank is desludged in the usual way by a suction tanker.

When desludging, which should be undertaken at least once a year, care should be taken to avoid damage to the tank by the hose nozzle.

The tank should not be emptied completely, so that a residual amount is left to allow the micro-organisms to break down the sewage. The tank should be refilled with water.

How should I install the tank?

There are basically two ground types:

1. Dry ground conditions – in light, totally dry, free draining soils where the water table does not rise above the base of the tank.
2. Wet ground conditions – in clay or heavy soils where the water table can rise above the base of the tank.

Dry ground conditions

1. Excavate the site, allowing for a minimum clearance on all sides and base of the unit of 150mm and level the base. If levelling pegs are used they should only be placed at the corners of the hole, well away from the septic tank.
2. Ensure that the hole is kept dry. Should any rain or surface water collect in the hole, this should be pumped out.
3. A base of at least 200mm of lean mix concrete should be provided.
4. Lower the septic tank in the hole using a nylon sling through the lifting points provided on the tank. Under no circumstances should the sling be attached to the inlet pipe or the outlet pipe.
5. Position the inlet pipe in line with the incoming drain. Note that the inlet and the outlet pipes are clearly embossed on the tank. The unique profile of the base will help to level the tank, but make sure the tank is in the truly upright position in order to maintain the 25mm head difference between the inlet and outlet pipes.
6. After any concrete in the base has taken up its initial set (usually after one day), ballast the tank by putting approximately 0.5m depth of water into it.
7. Backfill the space around the tank with pea gravel or similar material. The backfill should be free from organic material, large stones, bricks or sharp objects. Backfilling should be carried out in layers, making sure that voids are not left under and around the sides of the tank and that there are no localised stress concentrations. It is most important that the installer progressively fills the tank with water to the level above the backfill in order to stabilise pressures on the tank.
8. Remove any temporary covers and connect up the tank inlet and outlet pipe to your own pipework. Do not use reducers.
9. Backfilling can now proceed up to ground level. A galvanised lockable manhole cover (600mm x 450mm) and frame should be provided and set in concrete. The top of the manhole should not be set below the local ground level. If necessary, a further neck extension piece should be added to the tank to bring the cover up to ground level.
10. Venting can be provided through either the cover or a Tee piece arrangement on the outlet/inlet.

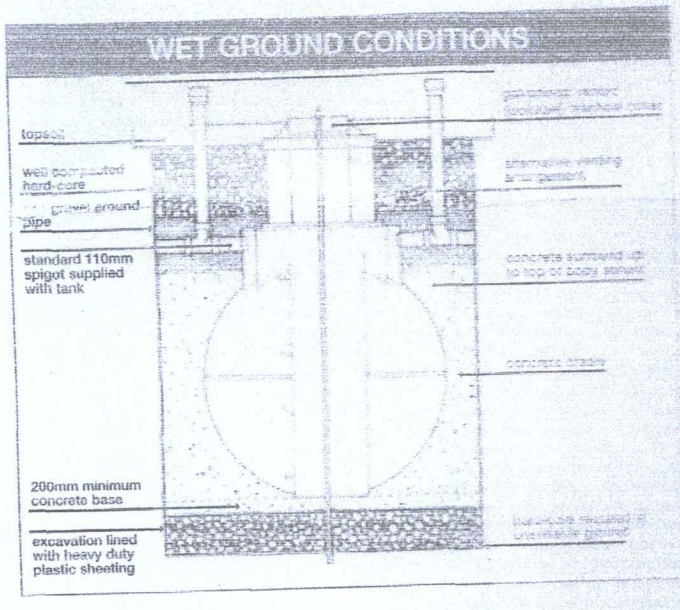

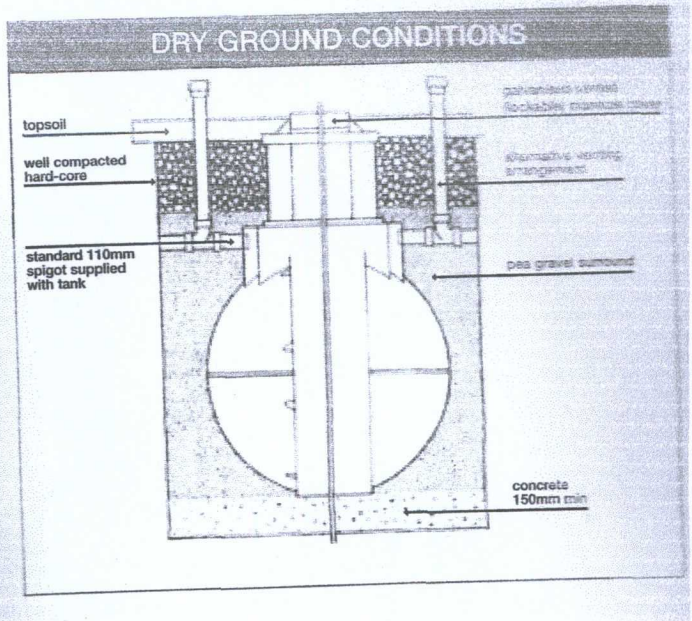

Wet ground conditions or badly drained ground

The installation procedure for wet ground conditions is similar to that for dry ground conditions, though the following additional points must be considered:

1. A lean mix concrete base of minimum depth 200mm should be provided. In wet ground conditions the installer should ensure that the base is adequate to support the weight of the septic tank and its contents. If the base of the excavation is unstable, i.e. running sand or similar, excavate an additional 250-300mm below the concrete levels and fill up with compacted hard-core. Place a sheet of polythene over the hard-core and up the sides of the excavation before putting in the concrete cradle.
2. Ensure that the water is pumped from the excavation during installation and that during backfilling the water is conveyed away from the hold.
3. Backfilling material should be lean concrete mix.
4. Ensure that the concrete is not too wet and that it is tamped in around the tank. Do not use a vibrating poker.
5. Only backfill with concrete up to the top of the body sphere. Do not surround the pipework with concrete.
6. It is most important that the installer progressively fills the tank with water to a level above the backfill in order to stabilise pressure on the tank.

Instructions for connection of extension neck

1. Unbolt existing neck from septic tank.
2. Use existing M16 holes (6 No.) in body as a guide to drill holes in bottom of extension neck.
3. Bold extension neck to body, seating joint with a waterproof bitumastic sealant.
4. Use existing M16 holes (6 No.) in bottom of septic neck as a guide to drill holes in top of extension neck.
5. Bolt the two parts together, bedding joints with a waterproof bitumastic sealant. When extension neck is used, tank must be encased in concrete (for details see wet ground conditions on this page).

N.B. If more than one extension neck is required, please contact Titan.

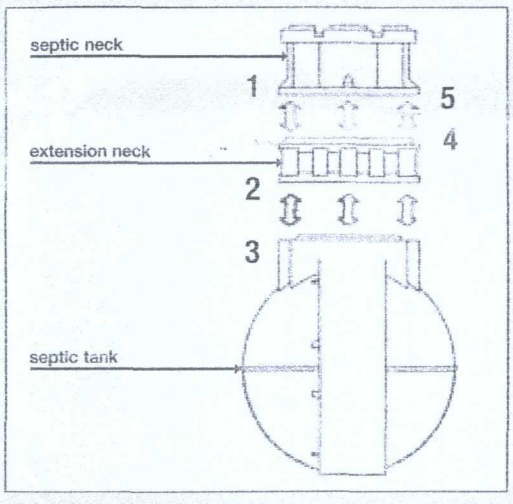

Kingspan
the Power Behind
TITAN
Titan Environmental Limited
Dundalk Road, Carrickmacross, Co. Monaghan, Ireland
Telephone Lo-Call (ROI): 1890 201 690 Fax Lo-Call (ROI): 1890 201 699 Email: carrick@titanenv.com

37 Seagoe Industrial Estate, Portadown, Co. Armagh, Northern Ireland BT63 5QD.
Sales Hotline: +44 (0) 28 4062 1420 Telephone: +44 (0) 28 3833 0668 Fax: +44 (0) 28 3835 0171 Email: portadown@titanenv.com
www.titanenv.com

BS EN ISO 9001: 2000 ISO 14001