TESCO STORE

HAWLEY ROAD

The Railway Hotel (PH)

Health Centre

SOUTHFIELD ROAD

LB

NORTH

ACCESS AS EXISTING

EXISTING PFS

EXISTING SERVICE YARD

EXISTING CAR PARK

GENERATOR

SB

HINCKLEY STATION

CAR PARK FOR HINCKLEY STATION

CAR PARK TO BE RESURFACED WITH NEW TARMAC

ALL EXISTING WHITE LINES TO BE REPAINTED

ALL EXISTING WHITE & YELLOW LINES TO BE REPAINTED. LOCAL AUTHORITY RECYLING BINS TO REMAIN AS EXISTING

CAR PARK TO BE RESURFACED WITH NEW TARMAC

CAR PARK TO BE RESURFACED WITH NEW TARMAC

CAR PARK TO BE RESURFACED WITH NEW TARMAC

NEW TESCO GANTRY SIGN

NEW TESCO SINGLE COVERED TROLLEY PORT

EXISTING TROLLEY BAY TO BE REMOVED & REPLACED WITH TESCO SINGLE COVERED TROLLEY PORT

EXISTING TROLLEY BAY TO BE REMOVED & REPLACED WITH TESCO SINGLE COVERED TROLLEY PORT

EXISTING TROLLEY BAY TO BE REMOVED & REPLACED WITH TESCO SINGLE COVERED TROLLEY PORT

EXISTING TROLLEY BAY TO BE REMOVED & REPLACED WITH TESCO SINGLE COVERED TROLLEY PORT

NEW 3M HIGH FENCING & GATE = TYPE TBC

NEW 3M HIGH PALISADE FENCING

NEW 3M HIGH PALISADE FENCING IN FRONT OF EXISTING WALL

NEW 3M HIGH GREEN MESH FENCING IN FRONT OF EXISTING 1.5M HIGH BALL STOP RAIL

NEW ANTI RAM RAID BOLLARDS AT MAX 1.5M CENTRES (TBC)

REMOVE EXISTING CONCRETE BOLLARDS

REMOVE EXISTING POST

NEW ACO DRAIN LAID TO EXISTING FALLS

REMOVE EXISTING BLOCKS & LAY NEW TARMAC TO MATCH EXISTING LEVELS

2 X 3M UNIT

BENCH

TROLLEY BAY

WOODEN BOLLARDS

POST

LITTER BIN

BAG RECYCLE

SPECIAL TROLLEY BAY

CYCLE STANDS AS EXISTING

NEW DROPPED KERB & ANY WHITE LINING REQUIRED

GAS INTAKE AS EXISTING

NEW CONDENSOR UNIT

NEW 3M DIA GALVANISED SPIRAL STAIR

NEW ARMCO PROTECTION BARRIER

OVERHEAD CANOPY PLANTING AS EXISTING

EXISTING ACO DRAIN TO BE RETAINED CONNECTED FROM AHU

NEW AIR HANDLING UNIT

NEW ARMCO PROTECTION BARRIER

NEW CONDENSOR UNIT - SIZE TBA

EXISTING TROLLEY CAGE TO BE RETAINED

NEW AUTOMATICALLY CONTROLLED SWING GATES

NEW ACCESS GATE

NEW GATE (ADJ)

EXTENT OF WALL TO BE DEMOLISHED/FENCE TO BE ERECTED

SUB STATION NI EXISTING

EXISTING TROLLEY BAY TO BE REMOVED & REPLACED WITH TESCO SINGLE COVERED TROLLEY PORT

DEMOLISH EXISTING WALL TO ALL INSTALL CLOSE BOARDED FENCE TO SAME HEIGHT AS EXISTING WALL

EXISTING ARMCO TO BE REMOVED.

PLANTING AS EXISTING

EXISTING CONCRETE BOLLARD TO REMAIN

EXISTING BOLLARDS TO REMAIN

EXISTING TELEGRAPH POLES

TAXI RANK

FLOWER BEDS AND KERBS TO REMAIN AS EXISTING

LIGHTING HEADS TO BE REPLACED ON EXISTING LAMP POSTS

LIGHTING HEADS TO BE REPLACED ON EXISTING LAMP POST

REMOVE EXISTING POST

REMOVE EXISTING CONCRETE BOLLARDS

PLANTING AS EXISTING

EXISTING TREES + SHRUBS TO BE CUT BACK.

EXISTING TREES TO BE CUT BACK.

EXISTING TREES + SHRUBS TO BE CUT BACK.

NOTES

This drawing to be read in accordance with the specification/Bills of Quantities and related drawings.

No Dimensions to be scaled from this drawing. All stated dimensions to be verified on site and the Architect notified of any discrepancies.

0 100

Scale bar 100mm at 1:1

SCHEDULE OF PARKING

SPACE WIDTH (As Existing-Average)	2.4M
AISLE WIDTH (As Existing-Min.)	6M
PARKING SPACES	197
DISABLED	9
PARENT AND TODDLER	12
OVERFLOW PARKING	-
TOTAL	**218**
TROLLEY BAYS	9
PARKING RATIO (PARKING SPACES+P&T)	1:13.9
PARKING RATIO (TOTAL)	1:13.4

NOTE

ANY DISCRPENCIES IN THE DRAWING ARE TO BE REPORTED TO THE LEAD ARCHITECT PRIOR TO ANY IMPLEMENTAION/INSTALLATION.

LEGEND

BB = BELISHA BEACON
RB = RAM-RAID STAINLESS STEEL BOLLARD

INDICATES EXTENTS OF BLOCK PAVING FINISH

INDICATES EXTENTS OF TARMAC

PLEASE REFER TO LATEST REVISION OF DESIGN STANDARD E01.01.01 FOR WHITE LINING. ALL ROAD MARKINGS TO BE IN ACCORDANCE WITH THE DEPARTMENT FOR TRANSPORT TRAFFIC SIGNS REGULATIONS AND GENERAL DIRECTIONS 1994 AS SET OUT IN THE DEPARTMENT OF TRANSPORT TRAFFIC SIGNS MANUAL (HMSO).

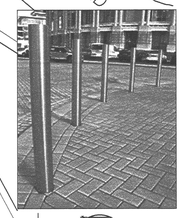

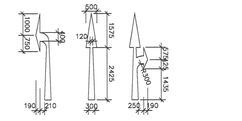

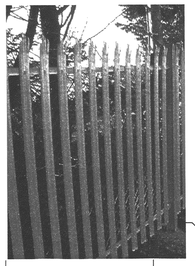

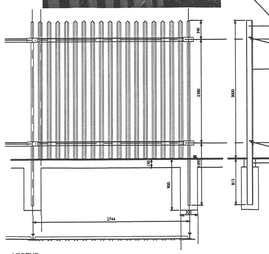

PALISADE FENCING DETAIL

LEGEND
1 = 150 x 44 x 7.44 RSJ
2 = PAILS 50 x 50 x 6' ANGLE
3 = PALE 6mm 'V' SECTION (2.45kg/m)
4 = 600 x 150 CONCRETE CILL (OPTIONAL)

FINISH: GALVANISED TO BS 729. POWDER COATED OPTIONAL EXTRA.

MANUFACTURED IN ACCORDANCE WITH BS 1722 Part 10

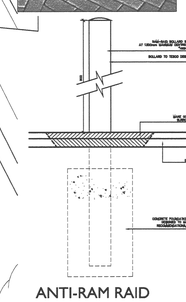

ANTI-RAM RAID BOLLARD DETAIL



TESCO STANARD COVERED TROLLEY BAY

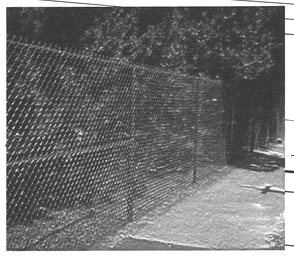

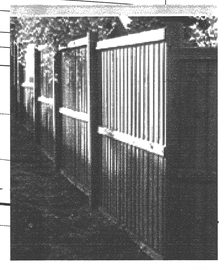

CHAIN LINK FENCING DETAIL

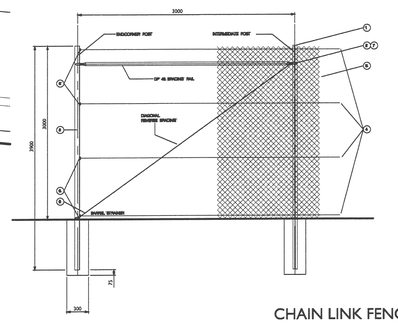

LEGEND
1 - POST ELADISTA DP72
2 - BRACING RAIL ELADISTA DP 45
3 - CHAINLINK 3400 x 60 x 3.55SLGD GALVANISED & PLASTIC COATED
4 - LINE WIRE 12.5SWG2mm GALVANISED & PLASTIC COATED
5- JOINT CLAMP & BARREL STRAINER
6 - SINGLE/DOUBLE RATCHET WINDER
7 - JOINT CLAMP
8 - STRAINING POST ELADISTA DP60

CLOSE BOARDED FENCING DETAIL

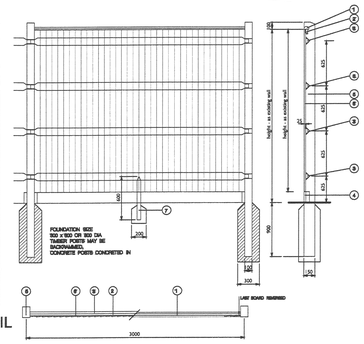

LEGEND
1 = CAPPING 65 x 38 TWICE WEATHERED
2 = COUNTER RAIL 45 x 28 (65 x 28 MORTICE)
3 = ARRIS RAIL 'as' 67 x 67 TENNONED (DRIVE IN) (65 x 28 MORTICE)
4 = GRAVEL BOARD 165 x 28 CLEATS 165 x 43 x 28
5 = POSTS 3400 x 160 x 100 HALF WEATHERED (5 TIMES MORTICED) CORNER POSTS 3400 x 160 x 160 HALF WEATHERED (10 TIMES MORTICED)
6 = FEATHER EDGE BOARD 1800 x dec 100 x 22 (16-8 x 100)
7 = CENTRE STUMP 600 x 60 x 60 CUT AT TOP TO FIT BOTTOM RAIL

REV	DATE	NOTE	IN
C	13.10.08	ACO DRAIN ADDED, ELEC. RESTRICT. COVENTANT SHOWN FENCE TO/AD SIZES INC	LH
B	08.10.08	GATES ADDED TO WEST BOUNDARY & BEHIND STORE	LH
A	03.10.08	VARIOUS IMAGES ADDED. ADDED FENCE AND BOLLARD DETAILS. VARIOUS NOTES AMENDED.	AS

Project
PROPOSED REFURBISHMENT
TESCO STORE
HINCKLEY

Title
PROPOSED SITE PLAN

Scale 1:200 @A0
Date SEPT 2008
Drawn AS
Checked

Drawing Number 6460_100
Revision C

DEVELOPMENT SERVICES
14 OCT 2008
RECEIVED

Saunders Partnership Architects
Studio Four
37 Broadwater Road
Welwyn Garden City
Hertfordshire, AL7 3AX

T 01707 386300
F 0870 8222135
www.saundersarchitects.com
offices at Welwyn Garden City | Bristol | Manchester

SAUNDERS