LEGEND: HARD LANDSCAPING

BOUNDARY TREATMENTS:

A-B, C-D: EXISTING KNEE RAIL: to be retained and painted with preservative prior to any planting.

D-E EXISTING FENCE: timber close boarded fence to substation to be retained.

E-F EXISTING BOUNDARY FENCE: post and wire fence to be retained.

G-H: EXISTING BOUNDARY FENCE: timber acoustic fence to be retained.

I-J: EXISTING BOUNDARY FENCE: weld-mesh fence to be retained; vegetation growing through fence to be cut back and removed from site.

SURFACE TREATMENTS - HGV SPECIFICATION:

PAVING: 200 x 100mm 'light grey' concrete paving; laid herringbone pattern.

PAVING: 200 x 100mm 'anthracite' concrete block paving; laid herringbone pattern.

DRIVEWAYS AND PARKING SPACES: Tarmac surface to HGV specifications. All demarcation including disabled and parent & child parking symbols to be painted in white thermoplastic paint.

DEMARCATION: yellow hatching to be painted onto tarmac surface.

NOTES:

1.0 SOILS: Subsoil to be scarified to 150mm depth prior to spreading topsoil to alleviate compaction. Imported or as saved topsoil to be in accordance with BS3882 'General Purpose Grade'. Screened or manufactured topsoil is not acceptable. Grass areas to be a minimum depth of 150mm, Shrub beds 300mm depth. Incorporate spent Mushroom compost (2-3 years well rotted- "Black") 40mm depth evenly worked into soil.

2.0 EXISTING TREES: Where trees are to be retained they should be subject to a full arboricultural inspection to assess condition and safety. Retained trees shall be protected from damage by erection of 2.3m weldmesh fencing on a scaffold framework in accordance BS 5837:2005 Figure 2. These barriers shall be maintained in position and in good condition until works are complete. Fencing to be located in accordance with Table 2. at a radius of 12 times the stem diameter (single stem trees) or 10 times the basal diameter (trees with more than one stem arising below 1.5m above ground level) refer to Clause 5.2.2. Further precautions are to be taken as detailed within BS 5837:2005 9.4.

3.0 TREE PLANTING: All trees to be in accordance with BS 3936 / 5236. Trees to be planted in accordance with BS 4428 and securely staked and tied in pits 1000 x 1000 x 750mm backfilled with topsoil mixed with 40L of tree planting compost, ensuring tree pits are a minimum of 75mm deeper and 150mm wider than the tree roots. Base of pits to be broken up to a depth of 150mm. Root balls to be encircled by Root Rain Metro or similar irrigigation pipe. Well water after planting.

Suitable foundations are to be provided to accomodate proposed tree planting and retained trees. In locations close to footpaths and roadways linear root barriers Greenleaf, ReRoot or similar are to be installed in accordance with manufacturers instructions. Where proposed tree locations conflict with services, trees are to be relocated in accordance with the appropriate utilities guidance notes subject to local authority approval. Proprietary root barrier Greenleaf, ReRoot or similar to be installed in accordance with manufacturers instructions where relocation is not considered appropriate.

4.0 TREE SURGERY / REMOVAL: Tree surgery,tree removal and stump removal (where required) to be carried out by a registered Tree surgeon in accordance with BS 3998:1989. Arisings to be removed to a licensed tip.

5.0 SHRUB PLANTING: plants to be in accordance with BS 3936 and handled in accordance with CPSE guidelines. All plants to have a minimum of three breaks, except Hedera with a minimum of two. Lay Geotextile membrane (to be Terram 'WeedGuard' or similar approved) on top of prepared topsoil (refer to item 1.0) covering all planted areas with a minimum overlap of 200mm between sheets. Cut a cross and pin back the membrane for each individual plant location and dig out the soil below the cut large enough to accept the root ball. Well water plants immediately after planting and prior to spreading of mulch. Shrub areas to be covered with 50mm depth bark mulch and kept weed free.

6.0 WEED CONTROL ON STEEP SLOPES: proposed planting areas steeper than 1:3 (33%) gradient are to be designed appropriately by a suitably qualified engineer to ensure slope stability. Where appropriate bark mulch and geotextile membranes are to be replaced with proprietary mulch matting such as Greenfix 2.4m wide mulch rolls or similar.

Prior to laying mulch sheeting planted areas are to be kept weed free and topsoil cultivated, removing stones clods and hollows. Mulch matting to be laid in close contact with the topsoil, installed and pegged in accordance with manufacturers recommendations. Once installed plants are to be planted through pre-cut slits or flaps which are to be refitted closely around plant stems in accordance with manufacturers recommendations.

7.0 MAINTENANCE: To be carried out at approximately monthly intervals to include the following:

a) Eradicate weeds by hand or chemical means.

b) Cut out dead or / and damaged stock or branches, prune as required.

c) Ensure all shrubs are firmed in.

d) Collect litter, sweep and tidy site.

e) Apply suitable pesticides, fungicides and fertilisers as required.

PLANT SCHEDULE

Trees

No.	Species Name	Specification	Girth	Height	Common Name
3 No.	Betula pendula 'Fastigiata'	Heavy Standard :3x :RB -5 brks	12-14cm	350-425cm	Fastigiate Birch
2 No.	Carpinus betulus 'Frans Fontaine'	Heavy Standard :Clear Stem 175-200 :3x :RB	12-14cm	350-425cm	Hornbeam 'Frans Fontaine'
6 No.	Sorbus aucuparia 'Cardinal Royal'	Feather Specimen: C	12-14cm		Rowan 'Cardinal Royal'

Shrubs

No.	Species Name	Specification	Height	Pot Size	Density	Common Name
213 No.	Brachyglottis 'Sunshine'	Branched :3 brks :C	20-30cm	2L	3/m²	Shrub Ragwort
170 No.	Ceanothus thyrsiflorus repens	Bushy :4 brks :C	20-30cm	2L	3/m²	Creeping Blueblossom
229 No.	Cotoneaster conspicuus 'Decorus'	Branched :3 brks :C	20-30cm	2L	3/m²	Cotoneaster 'Decorus'
423 No.	Cotoneaster horizontalis	Branched :3 brks :C	20-30cm	2L	3/m²	Herring-bone Cotoneaster
213 No.	Euonymus fortunei 'Emerald Gaiety'	Bushy :5 brks :C		2L	5/m²	Euonymus 'Emerald Gaiety'
159 No.	Hebe 'Mrs Winder'	Bushy :3 brks	20-30cm	2L	4/m²	Shrubby Veronica 'Mrs Winder'
236 No.	Lonicera nitida 'Baggesen's Gold'	Bushy :2 brks :C	20-30cm	2L	4/m²	Box Honeysuckle 'Baggesen's Gold'
309 No.	Lonicera nitida 'May Green'	Bushy :3 brks :C		2L	4/m²	Box Honeysuckle 'Maygreen'
322 No.	Spiraea japonica 'Fire Light'	Bushy :5 brks :C	30-40cm	2L	3/m²	Japanese Spirea
501 No.	Viburnum davidii	Bushy :2 brks :C	20-30cm	2L	4/m²	Viburnum
231 No.	Vinca minor 'Green Carpet'	Several shoots :C	15-20cm	2L	5/m²	Common Periwinkle

FENCING – TIMBER: KNEE RAIL
SCALE 1:20

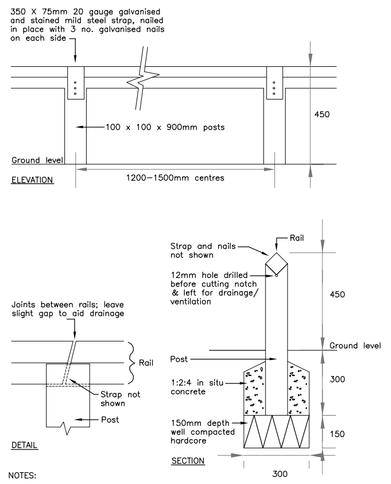

NOTES:
1. All notch cuts to tops of posts are to be made prior to preservative treatment being applied.
2. All timber is to be treated with an approved pressure–impregnated preservative.
3. All timber is to be sawn softwood.
4. All ironmongery is to be galvanised.
5. All timber should be stained with black (ral 9005) , colour to be approved.
6. Posts are to be positioned at 1200–1500mm centres, at all changes in direction, and at all intersections.

LEGEND: SOFT LANDSCAPING

GROUND COVER: ornamental shrub ground cover planting as scheduled.

BARK MULCH: to southern elevation, geotextile membrane to be laid prior to spreading of mulch as per planted areas; refer to notes, item 5.0.

TREE PLANTING: standard tree planting with NHBC radii*. All proposed trees to be securely staked and installed with irrigation pipe, refer to notes, item 3.0.

EXISTING TREES: to be removed, locations and dimensions shown as indicative only.

*NHBC radii illustrated based on Chapter 4.2 (NHBC Standards 2003) for Medium soils assuming foundation depth of 0.9m. Buildings within the NHBC radius should be designed so that their foundations are to a suitable depth in accordance with the NHBC guidelines. Canopy spread illustrated after 25 years growth.

This drawing and the design it depicts are copyright and may not be copied or reproduced without written permission from Bea Landscape Design Ltd. No liability will be accepted for amendments made by others. This drawing is to be read in conjunction with the landscape specification and other relevant drawings.

Do not scale from this drawing. Figured dimensions only to be used. Refer any query to office of origination.

rev	date:	amendments:	all:
A	22/02/2010	To co-ord with revised layout	SB
B	08/03/2010	In accordance with client's comments	SB
C	30/03/2010	In accordance with client's comments	SB
D	16/04/2010	To co-ord with revised layout	SB
E	20/04/2010	Hawley Road landscape reinstated	DP

cdm 2007; designers risk information | **severity**

bea landscape design ltd

client:
LIDL UK GmbH

project:
HAWLEY ROAD
HINCKLEY

title:
LANDSCAPE PROPOSALS

status:
PLANNING

date:	drawn:	number:
JAN '10	SB	10-08-01
scale@A1:	**checked:**	**revision:**
1:250	TGW	E

Landscape Institute Registered practice

Bea Landscape Design Ltd
132A 'The Westlands' Compton
Road Wolverhampton WV3 9QB

T: 01902 424 950 / 01902 425 001
F: 01902 422929
E: info@bealandscape.co.uk
W: www.bealandscape.co.uk