DCBLCKPLANS

SCANNED

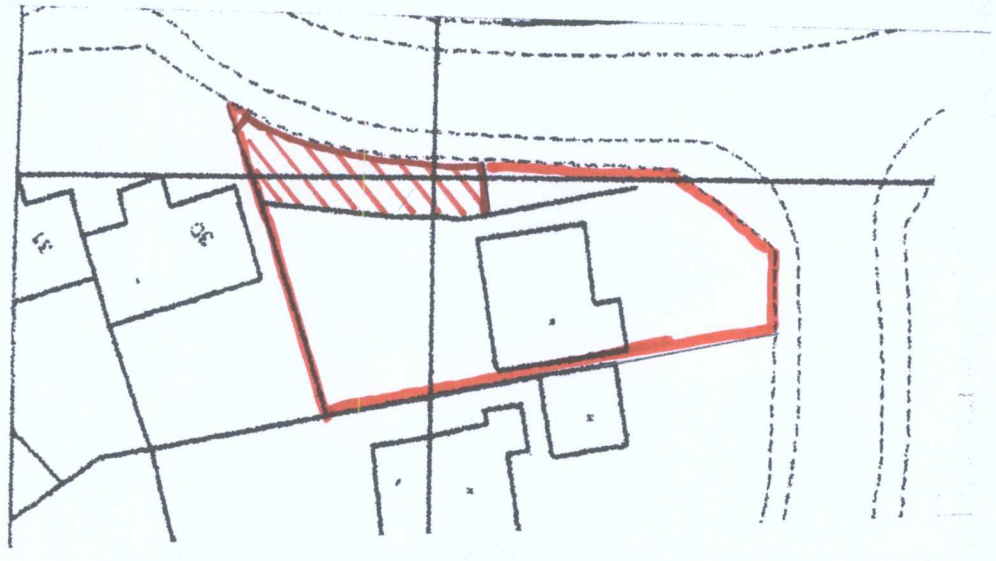


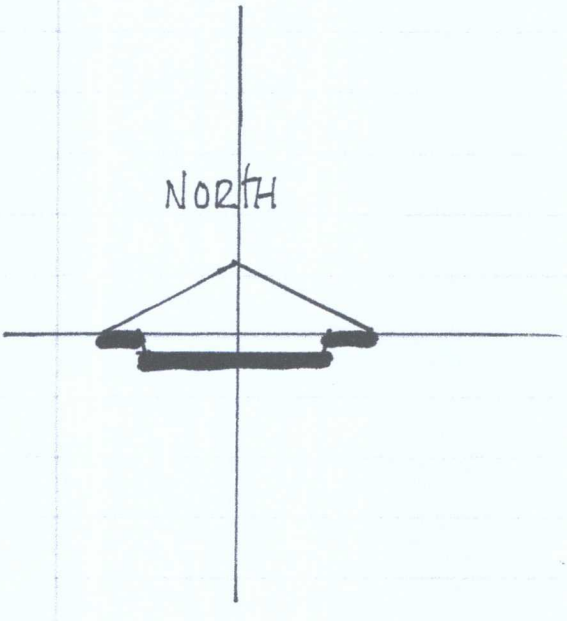


1:500

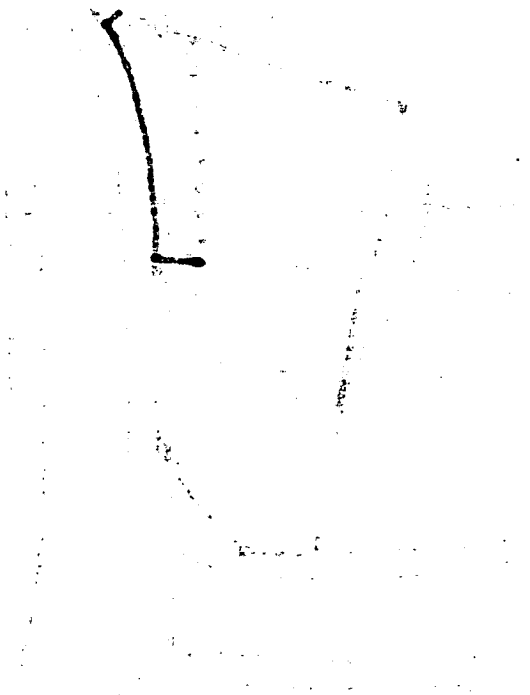

DEVELOPMENT SERVICES
21 NOV 2011
RECEIVED