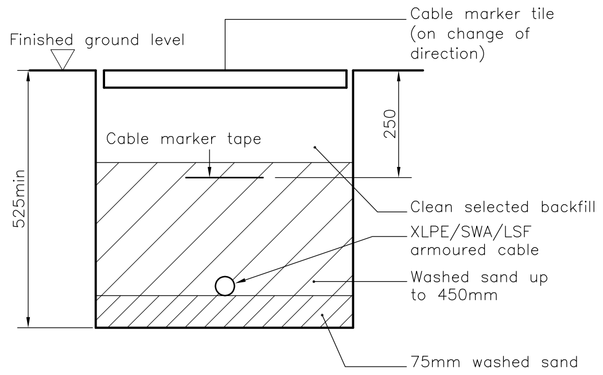

Cable Trench Section
Scale : NTS

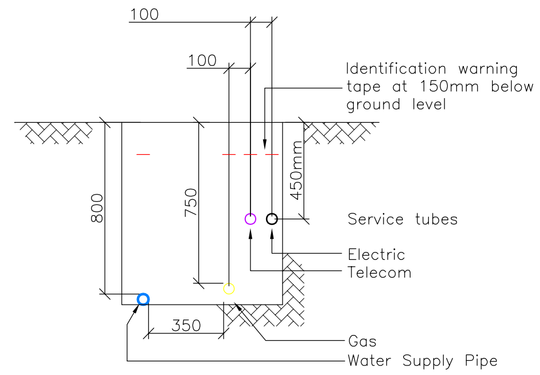

Typical Depths of Buried Services in Service Trench
Scale : NTS

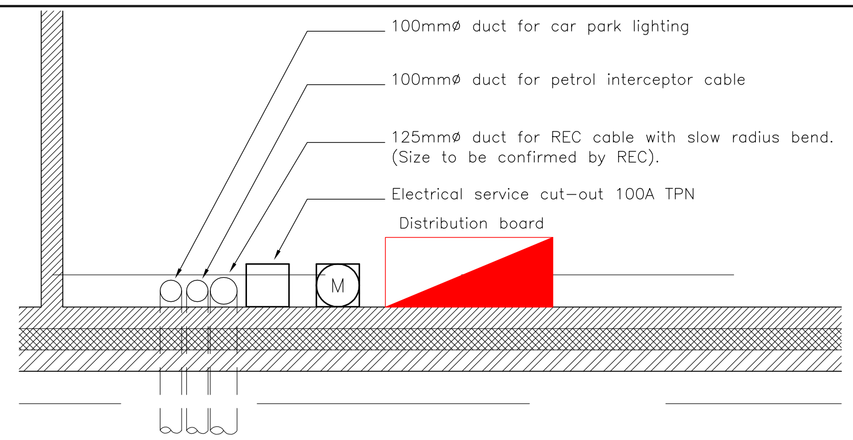

Duct Arrangement in External Store for Incoming Electrical Services.
Scale : NTS

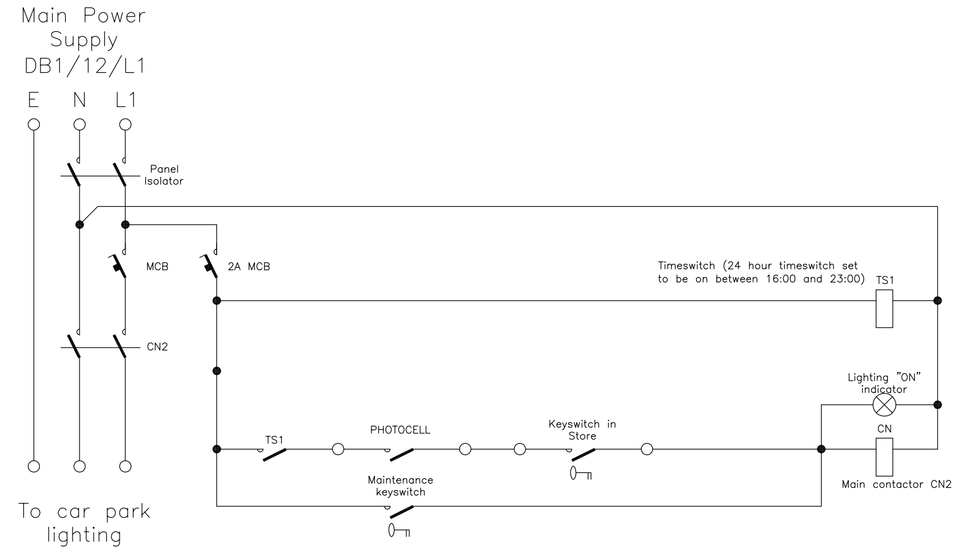

Lighting Controls Mode of Operation

Timer Switch
The timer switch limits operation of the car park lights to between 16:00 and 23:00.

Photocell Switch
The photocell switch inhibits the car park lights from operating during daylight hours.

Maintenance Keyswitch
The maintenenace keyswitch is located in the Store Room. The keyswitch allows the car park lights to operate regardless of the timeswitch, or photocell. It is designed purely for maintenance purposes and must be returned to the OFF position once maintenance is completed.

Control Schematic for Car Park Lighting

Car Park Light Column Elevation Type 'H'
N.T.S.

CONSTRUCTION ISSUE

Rev	Date	Description
C	16/07/12	Car park arrangement updated.
B	21/06/12	Issued for Construction.
A	12/10/11	Tender Issue.

consulting engineers edp
edp consulting limited
246 Aylestone Lane, Wigston, Leicestershire, LE18 1BD
Tel: 0116 281 2422
Fax: 0116 257 8940
Email: enquiry@edp-engineers.co.uk
Web: www.edp-engineers.co.uk

CLIENT AND JOB TITLE
Barwell Parish Council
Proposed Sports Pavillion
Dovecote Way
Barwell

DRAWING TITLE
Site Plan
Electrical External Services & Car Park Lighting

DRAWN	PJB	CHECKED	LB
SCALE	1:200 @ A1	DATE	Oct 2011

DRAWING NO.
1894/E/04

A B C