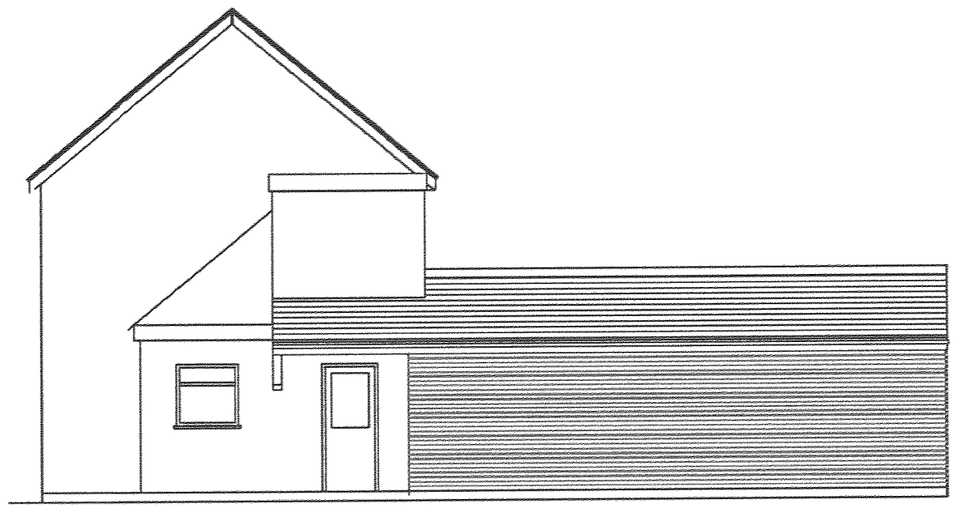

ELEVATION TO BOUNDARY

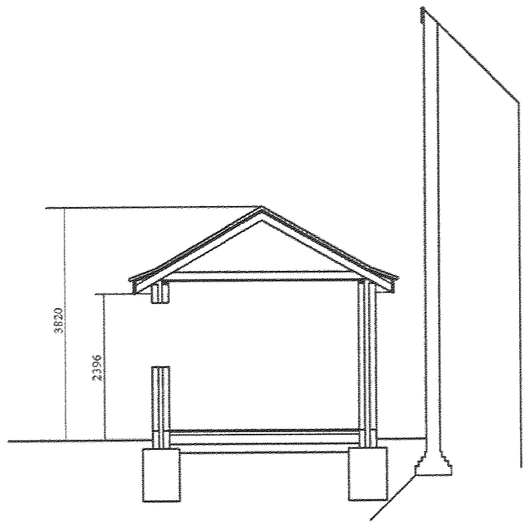

SECTION

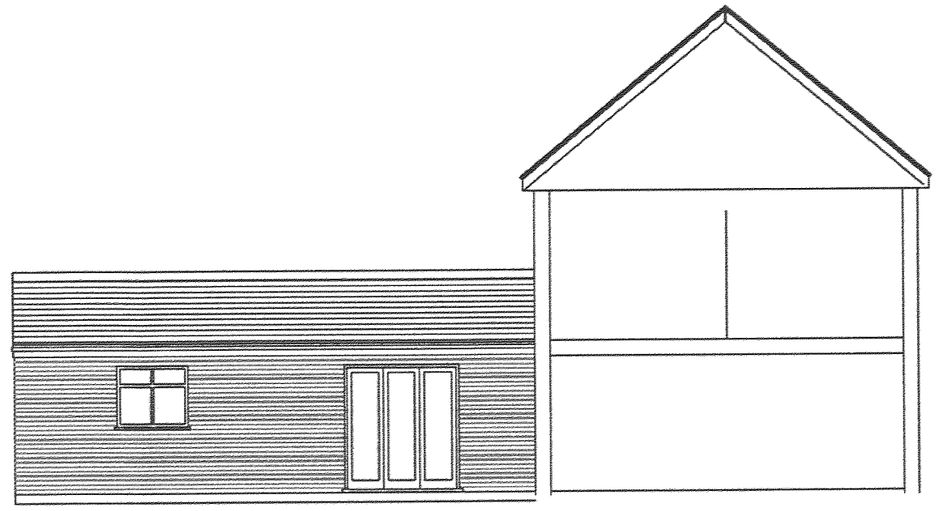

ELEVATION TO GARDEN



REAR ELEVATION

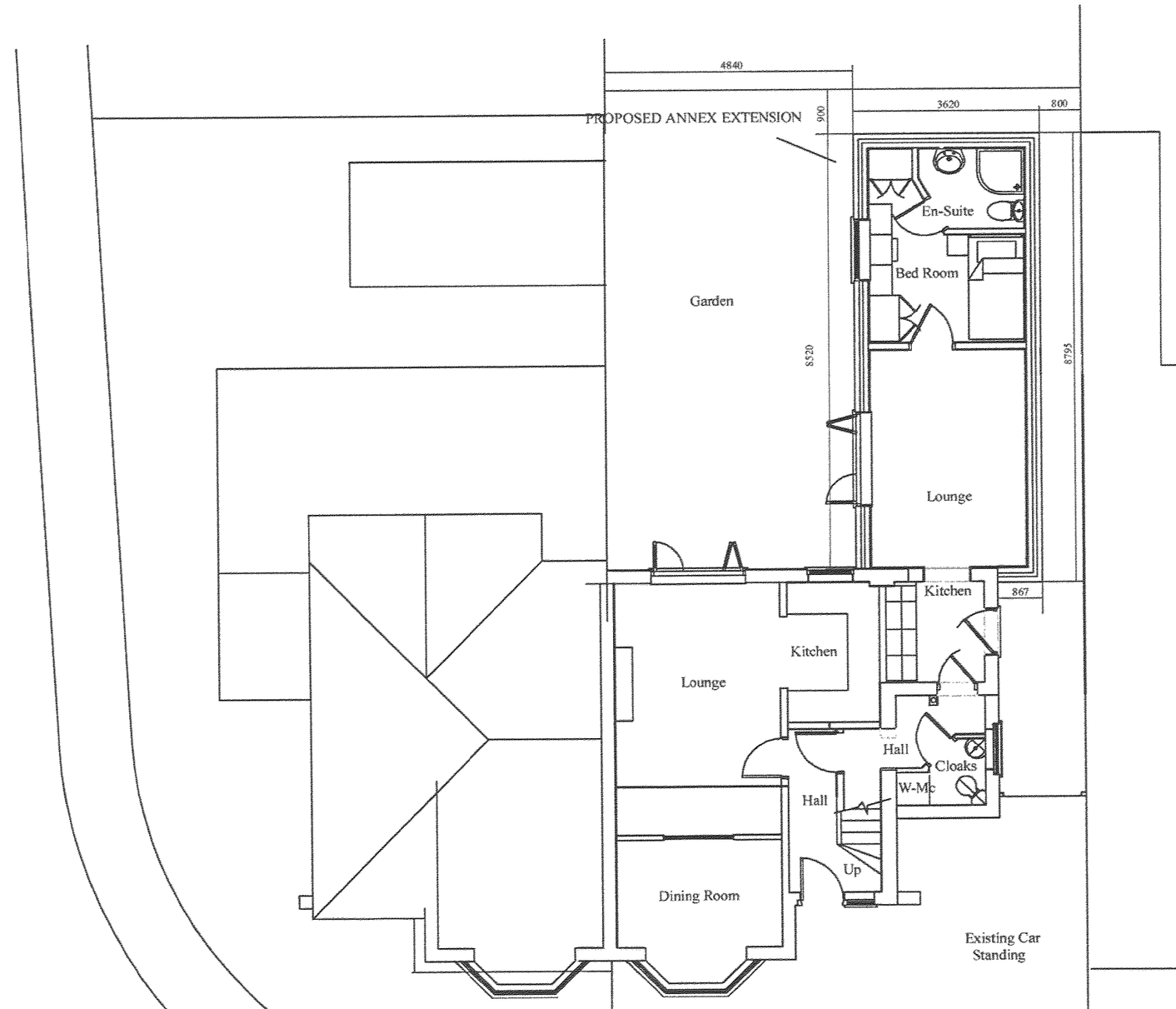

SITE AND GROUND FLOOR PLAN

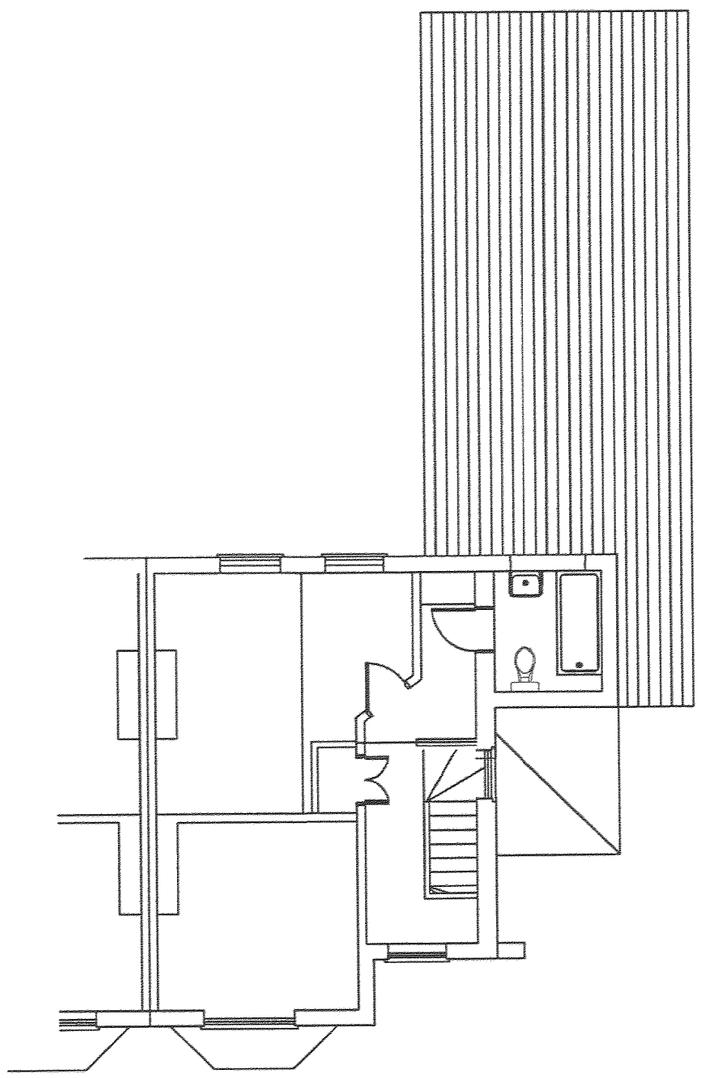

FIRST FLOOR PLAN



FRONT ELEVATION

DEVELOPMENT SERVICES
21 MAY 2010
RECEIVED

Client
Mr. D Powers
3 Sketchley Rd.
Burbage

Title
PROPOSED PLANS & ELEVATIONS

Project
Proposed Single Storey Annex to Rear of House at :- 3 Sketchley Rd., Burbage

Scale	Drn.By	Date
1:100	JHW	Mar 10

Drg.No.	Rev.
SK004	A

PDF created with pdfFactory trial version www.pdffactory.com