N

A 447 to Hinckley

Ashby Road

A 447 to Stapleton

pet shop
245m²

concrete apron

369m²

40.5m²

grooming room

sign

A

B

access

detached
house

Dated 19/4/11

all lighting removed see amended plan.



Elevation On Arrow A

Elevation On Arrow B Similar

scale 1:50

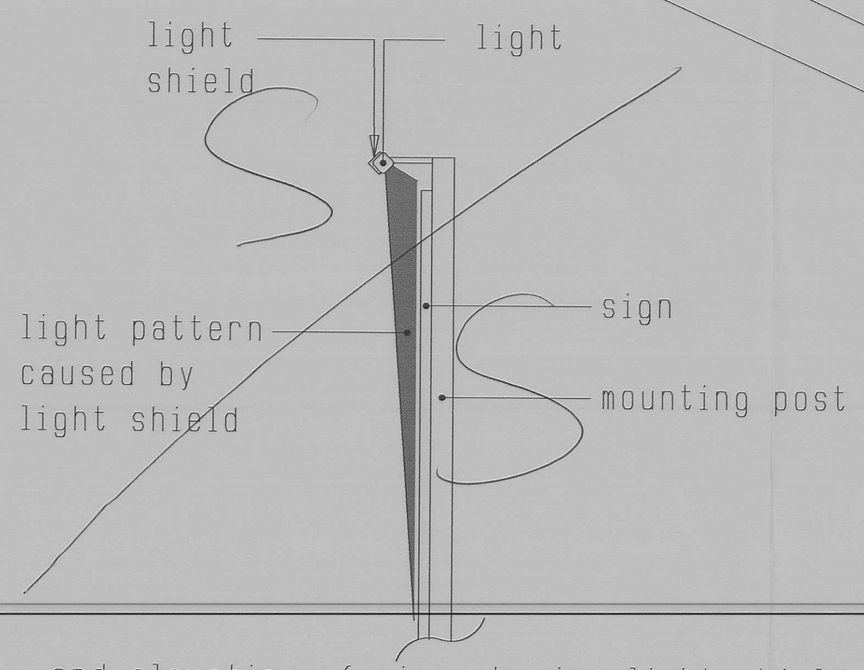

end elevation of sign showing light shields
scale,1:20

CLIENT
Mr Graham Tandy

JOB TITLE
The Pingle
Ashby Road
Stapleton
Leicester
LE9 8JA

DRAWING TITLE
Erection Of Signage
(Retrospective)

SCALE	DATE	DRAWN BY
1:200 & 1:50	jan 2011	D Wilkinson A Moore

DRG NO
4254/2 - 0164/2