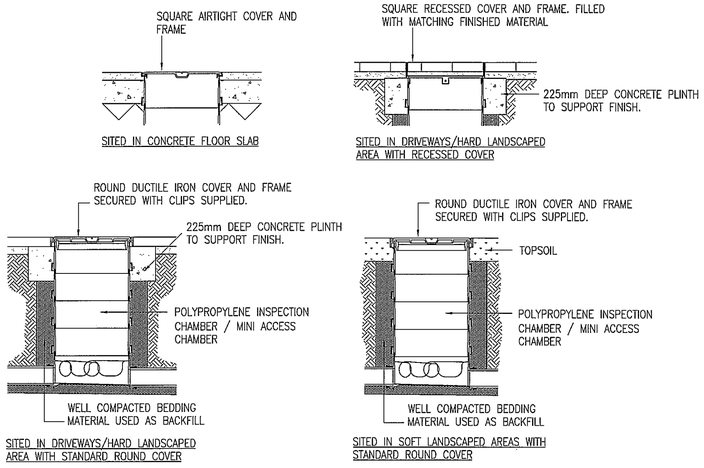

POLYPROPYLENE INSPECTION CHAMBERS SITED IN TRAFFICKED AREAS MUST HAVE A MINIMUM OF 150MM CONCRETE BED AND SURROUND.

POLYPROPYLENE INSPECTION CHAMBERS
Installation Details

BASED ON HEPWORTH ACCESS SYSTEMS.
POLYPROPYLENE INSPECTION CHAMBER (475ø) WITH REDUCED ACCESS >1200MM DEPTH.
POLYPROPYLENE INSPECTION CHAMBER (475ø) >600MM DEPTH.
MINI ACCESS CHAMBER (300ø) <600MM DEPTH.

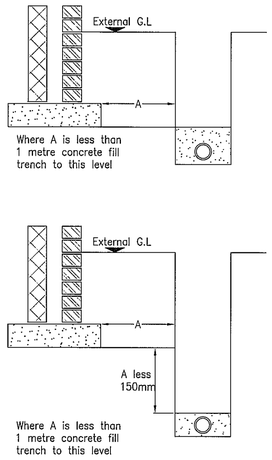

PIPE RUNS NEAR BUILDINGS

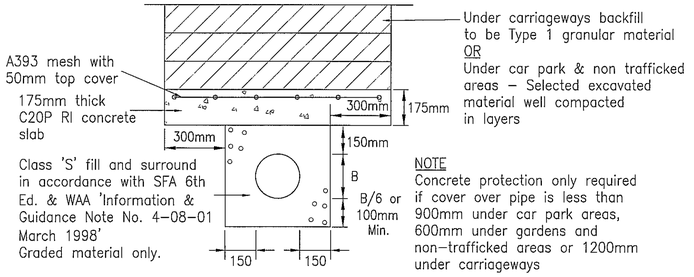

NOTE
Concrete protection only required if cover over pipe is less than 900mm under car park areas, 600mm under gardens and non-trafficked areas or 1200mm under carriageways

CONCRETE PIPE PROTECTION

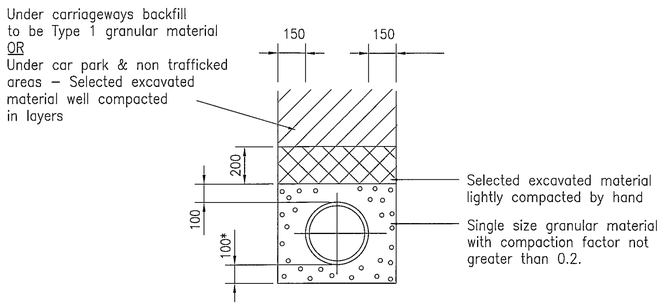

* Class 'S' bedding depth to be $\frac{1}{6}$ pipe dia. or 100mm, whichever is the greater.

Nominal Pipe Size DN (mm)	Pipe Bedding Requirement Size of Aggregate (mm)
150	14 to 5
225 – 525	20 to 5

CLASS S BEDDING

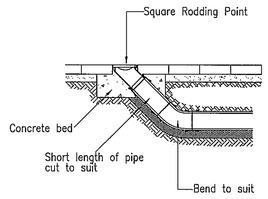

RODDING POINT
Installation Details

Cover Grade To BS EN: 124	Location
D400	For use in industrial roads and parking areas accessible to all types of road vehicles including HGV's
C250*	For use in private roads and parking areas accessible to refuse vehicles, fire appliances etc with possible occasional HGV use
B125	For use in footways, pedestrian areas, driveways and car parks accessible by light vehicles only.
A15	For use in areas which can only be used by pedestrians and pedal cyclists
*D400 may be used in lieu of C250 if preferred	

MANHOLE/INSPECTION CHAMBER COVER GRADES TO BS EN: 124

DO NOT SCALE

This drawing is the Copyright protected Intellectual property of The Diamond Wood Partnership and is not to be used or reproduced in any way without our written permission.

NOTES

1. THIS DRAWING IS TO BE READ IN CONJUNCTION WITH ALL DWP DRAWINGS & ALL OTHER RELEVANT ENGINEERS, ARCHITECTS & SPECIALIST DESIGN DETAILS.
2. THE POSITION, LINE, LEVEL AND DIAMETER OF ALL EXISTING DRAINAGE APPARATUS SHOULD BE CONFIRMED ON SITE PRIOR TO THE COMMENCEMENT OF THE WORKS. ANY DISCREPANCIES SHOULD BE REPORTED TO THE ENGINEER IMMEDIATELY.
3. ALL DIMENSIONS ARE IN MILLIMETERS UNLESS OTHERWISE STATED.
4. THE CONNECTION OF FOUL AND SURFACE WATER DRAINAGE TO THE EXISTING PUBLIC SEWER SYSTEM SHALL BE SUBJECT TO THE APPROVAL OF SEVERN TRENT WATER LTD.
5. ALL WORK IS TO BE CARRIED OUT IN ACCORDANCE WITH THE CURRENT BRITISH STANDARDS, BS CODES OF PRACTICE & BUILDING REGULATIONS.
6. ALL DRAINAGE WORKS SHALL BE CARRIED OUT IN ACCORDANCE WITH WSA "SEWERS FOR ADOPTION (6TH EDITION)" AND "CIVIL ENGINEERING SPECIFICATION FOR THE WATER INDUSTRY (7TH EDITION)".
7. UPVC PIPES AND FITTINGS TO COMPLY WITH BS EN 1401-1 1998.
8. CLAYWARE PIPES AND FITTINGS SHALL COMPLY WITH BS EN 295:1991 PART 1.
9. RUBBER JOINT RINGS SHALL BE TYPE D TO BS 2494 AND SHALL BE OBTAINED FROM PIPE MANUFACTURER.
10. DRAINAGE TO BS 8301 WITH PIPES OF APPROVED TYPE ON GRANULAR BED AND SURROUND AND ALL LAID IN STRICT ACCORDANCE WITH THE MANUFACTURERS INSTRUCTIONS.
11. PIPES UNDER BUILDINGS AND WITH COVER LESS THAN:- 600 UNDER GARDENS AND NON-TRAFFICKED AREAS, 900 UNDER CAR PARKING AREAS, 1200 UNDER ROADS: TO BE SURROUNDED IN MIN. 150 THICK CONCRETE (CLASS Z BEDDING)
12. ALL PIPES ENTERING & EXITING MANHOLES ARE TO BE CONNECTED WITH SOFFITS LEVEL.
13. FIRST FLEXIBLE JOINT IN PIPES ADJACENT TO A MANHOLE SHALL BE A MAX. 600MM FROM INSIDE FACE OF MANHOLE, CONNECTING TO ROCKER PIPE.
14. PRECAST CONCRETE MANHOLES, COVER SLAB AND SEATING RINGS TO COMPLY WITH BS 5911 PT200.
15. BRICK MANHOLES TO BE CONSTRUCTED IN FLUSH POINTED ENGLISH BOND CLASS B SOLID ENGINEERING BRICKS TO BS 3921 IN SAND/CEMENT MORTAR.
16. MANHOLE STEP IRONS TO COMPLY WITH BS 1247.
17. MANHOLE COVERS AND FRAMES TO BE DUCTILE IRON HEAVY DUTY GRADE D400 DOUBLE TRIANGULAR TO BS EN 124 IN CARRIAGEWAYS AND HEAVY VEHICULAR TRAFFICKED AREAS (150MM THICK). MANHOLE COVERS AND FRAMES TO BE DUCTILE IRON MEDIUM DUTY GRADE B125 CIRCULAR OR RECTANGULAR TO EN 124 IN NON TRAFFICKED AREAS.
18. ALL CEMENT USED IN THE CONSTRUCTION OF MANHOLES SHALL BE MINIMUM CLASS 3 SULPHATE RESISTING PORTLAND CEMENT (SRPC) TO THE RELEVANT PROVISIONS OF BS 4027 CESWI SPEC CL 2.15.
19. REFER TO CESWI SPECIFICATION CL 2.20 FOR SAND/CEMENT MORTAR GRADES.
20. HIGH STRENGTH GRANOLITHIC CONCRETE TOPPING TO BENCHING TO BE STEEL TROWELLED TO A DENSE SMOOTH FACE NEATLY SHAPED AND FINISHED TO ALL BRANCH CONNECTIONS IN ACCORDANCE WITH CESWI SPECIFICATION CL. 4.30.
21. PRE-FORMED CHANNELS SHALL BE USED AT MANHOLES WHERE POSSIBLE.
22. PIPES SHALL BE LAID TO THEIR TRUE LINE AND LEVEL BY LASER OR BY BONING EACH END AND MIDDLE.
23. ALL SOFT SPOTS WITHIN PIPE TRENCHES SHALL BE REMOVED AND FILLED WITH TYPE 1 MATERIAL.
24. NO WATER SHALL BE ALLOWED TO ACCUMULATE IN PIPE TRENCHES DURING CONSTRUCTION.
25. ALL FILL MATERIAL SHALL BE CONSOLIDATED IN LAYERS NOT EXCEEDING 225MM.
26. ALL INSITU CONCRETE USED IN PIPE PROTECTION TO BE MIN. GRADE C 20P.
27. COMPRESSIBLE FILLER FOR INTERRUPTION OF CONCRETE PIPE PROTECTION SHALL CONSIST OF BITUMEN IMPREGNATED INSULATING BOARD TO BS1142 PT3 AT EACH PIPE JOINT; THICKNESS IN ACCORDANCE WITH CESWI CLAUSE 2.52.
28. ANY REDUNDANT DRAINS SHALL BE REMOVED OR CONCRETE SEALED.
29. CONCRETE TO BE SULPHATE RESISTING.

Rel.	Revision	Date	By

Issue

FOR COMMENT

THE DIAMOND WOOD PARTNERSHIP
CONSULTING ENGINEERS

The Old School
Shilby Road
Enderby
Leicester
LE19 4AR
T: 0116 284 8989
F: 0116 284 8898
E: mail@diamondwood.co.uk

Project Title
UNITS Z1,Z2,Z3
TUNGSTEN PARK
HINCKLEY

Drawn	Date
LS	APR 2011
Scale: NTS	Checked

Drawing Title
PROPOSED DRAINAGE CONSTRUCTION DETAILS

Project No.	Drawing No.	Revision
11-10645	10-002	