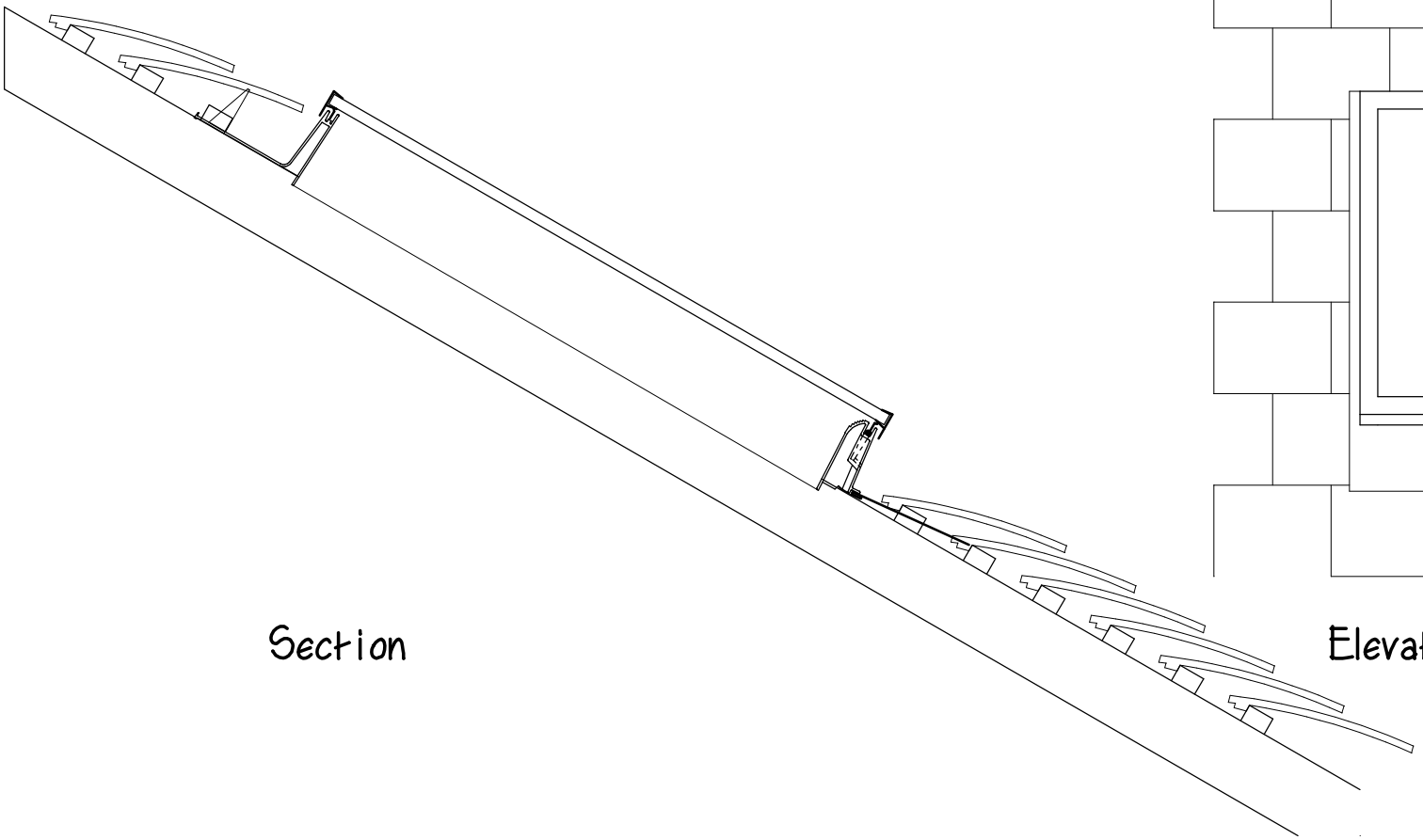

Section

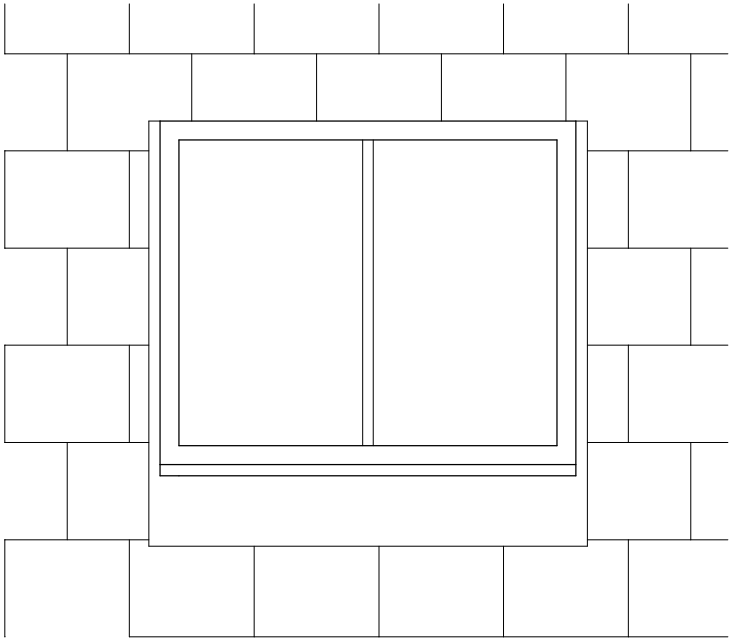

Elevation

Hinckley & Bos worth Borough Council
Planning Ref : 10.00101/FUL

Velux GPL top-hung Conservation Roof Windows - GPL SD5P1 C04 550mm wide x 980mm high

Philip Baumber Architectural Limited
50, Radmore Road, Hinckley
Leicestershire, LE10 0RQ
tel. 01455 612790 fax. 01455 459382
e.mail. philip.baumber1955@btinternet.com

Project : Holly House Farm, Brascote, LE9 9LE for Mr. & Mrs. M. Smith	Scale : 1:10 @ A4
	Date : March 2013
	Drawn: PCB
	Job No.
Drg. Title : Velux Window Details	Drg. No. WD 02
	Rev.