THIS DRAWING MUST NOT BE SCALED.
PRIOR TO THE COMMENCEMENT OF ANY WORKS, THE BUILDER IS TO CHECK AND/OR DETERMINE ALL CONSTRUCTION DETAILS, INCLUDING CHECKING EXISTING SITE LEVELS AND DIMENSIONS. THE DRAWING IS TO BE READ IN CONJUNCTION WITH ALL OTHER PROJECT DRAWINGS, CONSTRUCTION NOTES AND/OR PROJECT SPECIFICATION. ALL DISCREPANCIES SHOULD BE REPORTED IMMEDIATELY.

Rev.	Date	Details	Drawn

LAYOUT

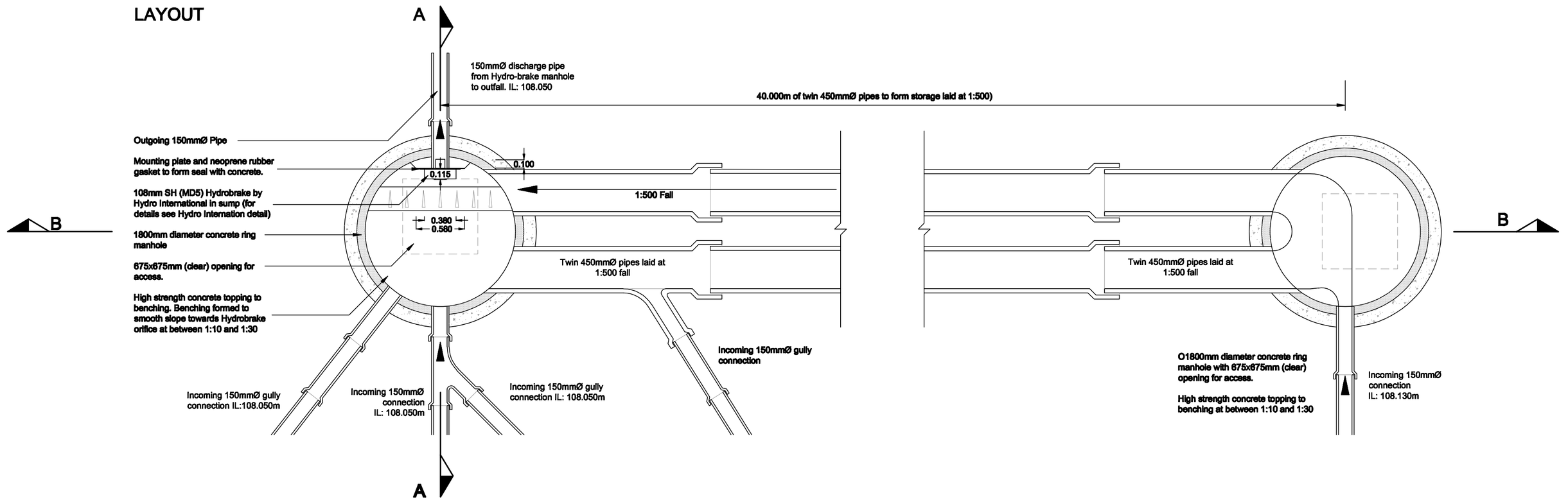

SECTION A-A

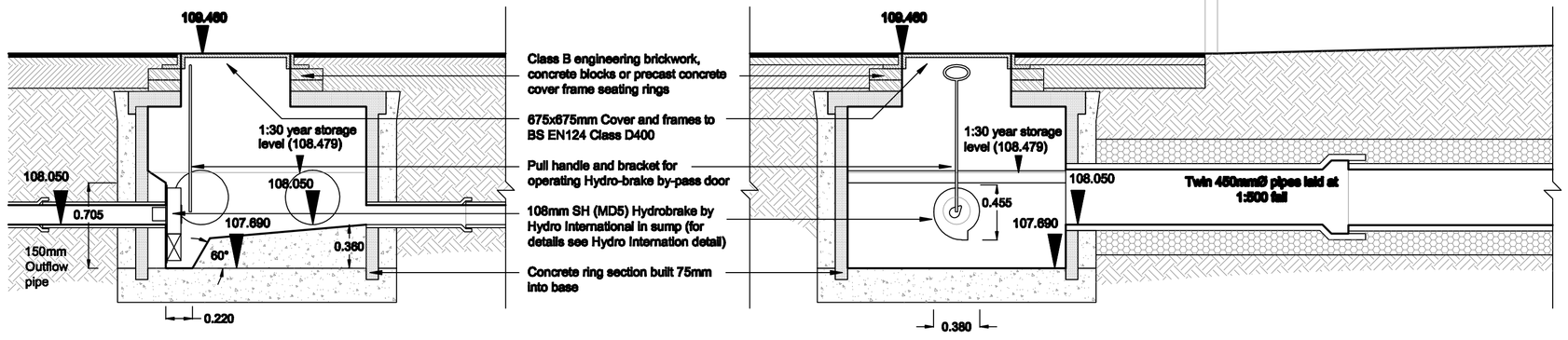

SECTION B-B

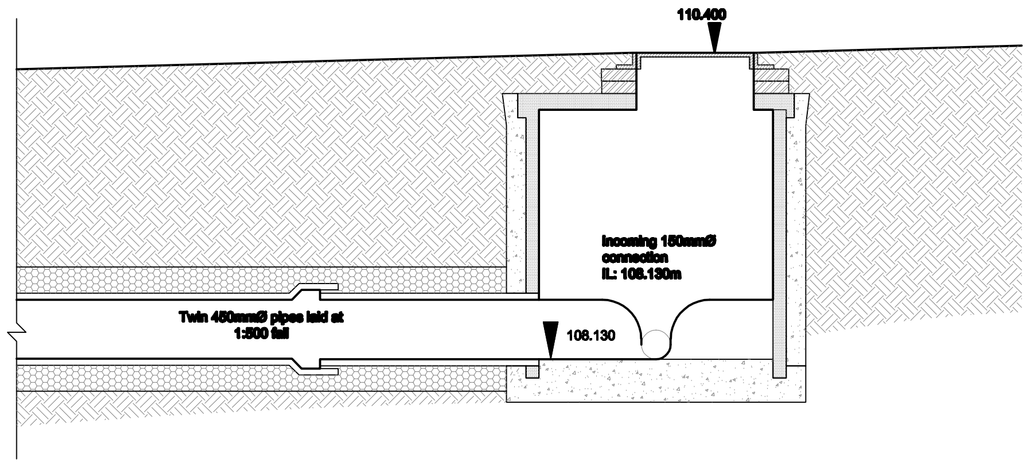

"RING" SOAKAWAY DETAIL

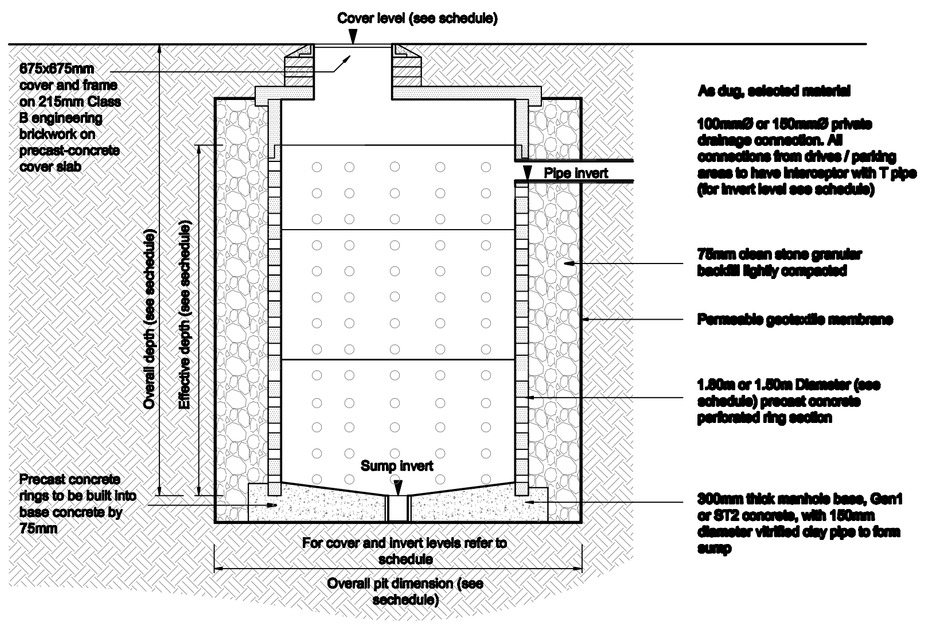

INTERCEPTOR

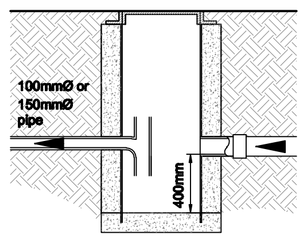

100mmØ or 150mmØ T pipe located on outflow pipe to act as oil interceptor

Soakaway schedule:

Ref:	Type:	Cover level:	Pipe Invert level:	Sump Invert level:	Effective depth:	Overall depth:	Ring diameter:	Pit dimension:
SA1	Ring	109.65	108.540	105.660	3.887	3.990	1800mm	2.70x2.70m
SA2	Ring	108.85	108.190	104.350	4.006	4.500	1500mm	2.25X2.25m

cadsquare
Cadsquare Midlands Ltd
The Stables
Woodbury Lane
Norton
Worcestershire
WR5 2PT
t: 01905 761580
f: 01905 764051
www.cadsquare.co.uk
ARCHITECTURAL AND URBAN DESIGN

Site Address:	Description:
55 COWPER ROAD BURBAGE LEICESTERSHIRE	STORM WATER STORAGE AND SOAKAWAY DETAIL

Drawing Number: 07-055 / 516

Date: JAN 2008 | Scale: NTS

Status: PRELIMINARY

AutoCAD Reference: N.A.

Drawn: SCH | Checked: PNH

Client:

ASPECTS DEVELOPMENTS LTD

THIS DRAWING IS THE COPYRIGHT OF CADSQUARE MIDLANDS LTD AND MUST NOT BE USED IN CONJUNCTION WITH ANY OTHER PROJECT WITHOUT CADSQUARE MIDLANDS LTD WRITTEN CONSENT