Diagram 17 **Flue outlet positions for solid fuel appliances**

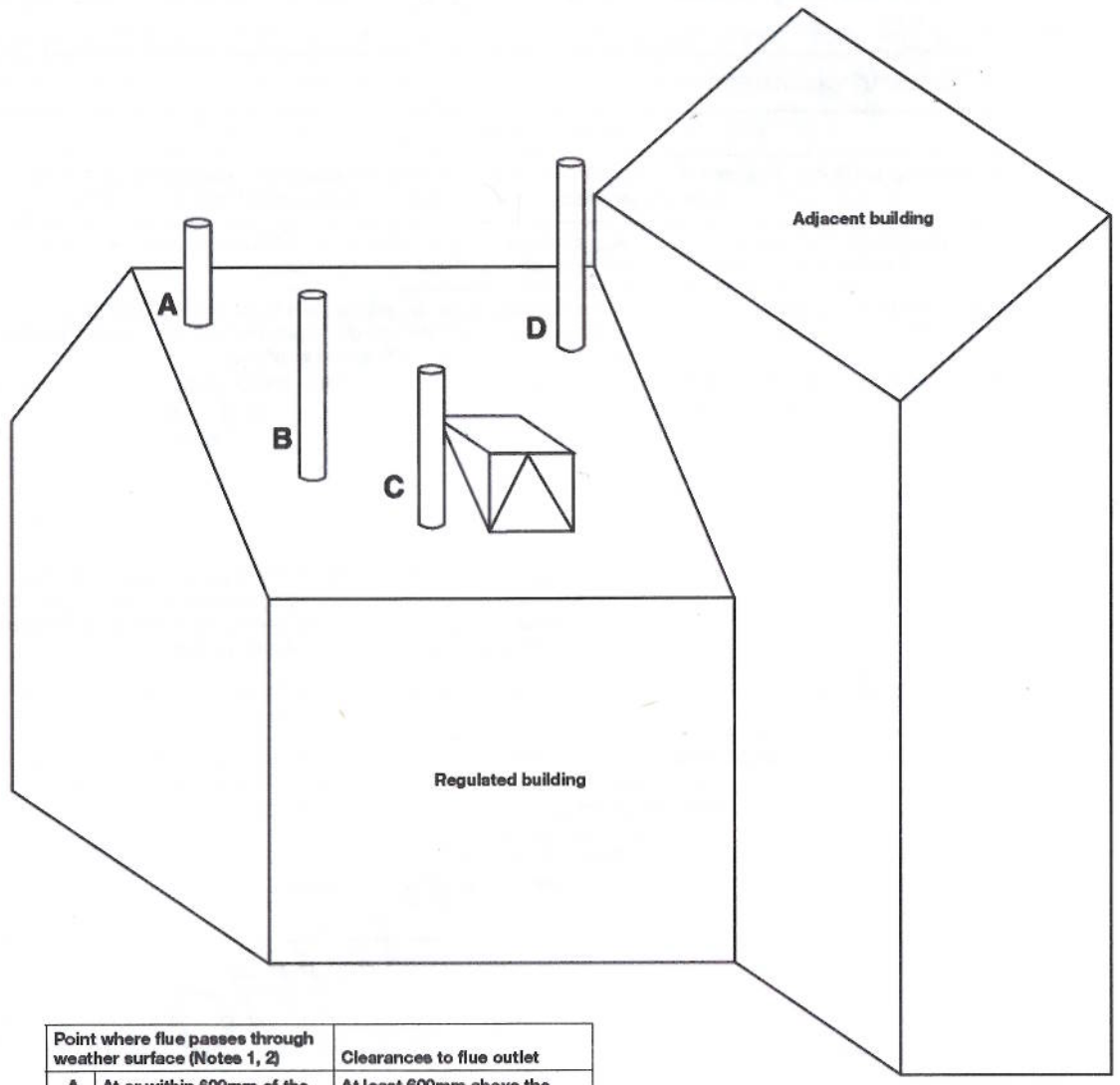

Point where flue passes through weather surface (Notes 1, 2)		Clearances to flue outlet
A	At or within 600mm of the ridge	At least 600mm above the ridge
B	Elsewhere on a roof (whether pitched or flat)	At least 2300mm horizontally from the nearest point on the weather surface and: a) at least 1000mm above the highest point of intersection of the chimney and the weather surface; or b) at least as high as the ridge.
C	Below (on a pitched roof) or within 2300mm horizontally to an openable rooflight, dormer window or other opening (Note 3)	At least 1000mm above the top of the opening.
D	Within 2300mm of an adjoining or adjacent building, whether or not beyond the boundary (Note 3)	At least 600mm above any part of the adjacent building within 2300mm.

Notes

1) The weather surface is the building external surface, such as its roof, tiles or external walls.

2) A flat roof has a pitch less than 10°.

3) The clearances given for A or B, as appropriate, will also apply.

4) A vertical flue fixed to an outside wall should be treated as equivalent to an inside flue emerging at the nearest edge of the roof.

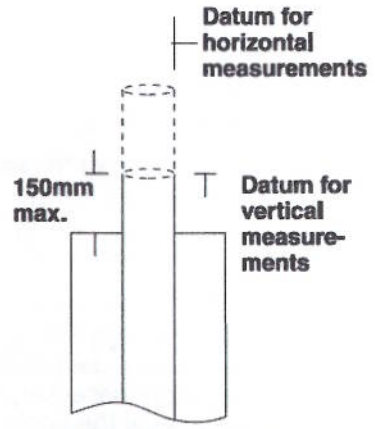

The datum for vertical measurements is the point of discharge of the flue, or 150mm above the insulation, whichever is the lower

Diagram 18 **Flue outlet positions for solid fuel appliances – clearances to easily ignited roof coverings**
(Note: This diagram needs to be read in conjunction with Diagram 17)

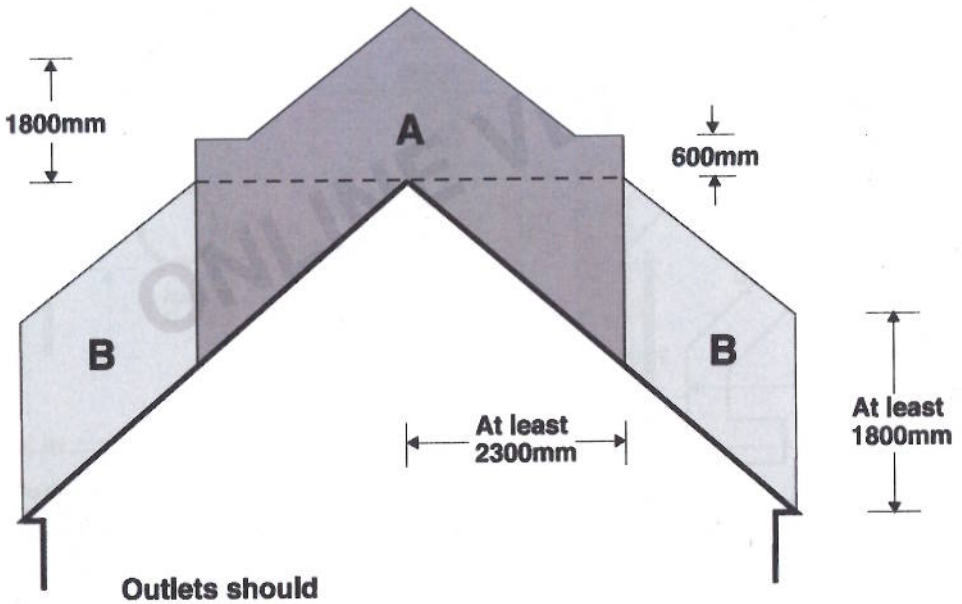

Area	Location of flue outlet
A	At least 1800mm vertically above the weather surface and at least 600mm above the ridge.
B	At least 1800mm vertically above the weather surface and at least 2300mm horizontally from the weather surface.

2.12 A way of meeting the requirements where *flues* discharge on or in close proximity to roofs with surfaces which are readily ignitable, such as where roofs are covered in thatch or shingles, would be to increase the clearances to *flue outlets* to those shown in Diagram 18.

Note: Thatched roofs can sometimes be vulnerable to spontaneous combustion caused by heat transferred from *flues* building up in thick layers of thatch in contact with the *chimney*. To reduce the risk it is recommended that rigid twin-walled insulated metal *flue liners* be used within a ventilated (top and bottom) masonry *chimney* void provided they are adequately supported and not in direct contact with the masonry. Non-metallic *chimneys* and cast in-situ *flue liners* can also be used provided the heat transfer to the thatch is assessed in relation to the depth of thatch and risk of spontaneous combustion.

Spark arrestors are not generally recommended as they can be difficult to maintain and may increase the risk of *flue* blockage and *flue* fires.

Further information and recommendations are contained in Hetas Information Paper 1/007 *Chimneys in Thatched Properties*.

Connecting fluepipes

2.13 For connecting *fluepipes* a way of meeting the requirements would be to follow the general guidance in Paragraphs 1.32 and 1.33.

Location and shielding of connecting fluepipes

2.14 Connecting *fluepipes* should be used only to connect appliances to their *chimneys*. They should not pass through any roof space, partition, internal wall or floor, except to pass directly into