ORIGINATOR	DRAWN	DATE
RO	RB	20/03/08

DO NOT SCALE
USE WRITTEN DIMENSIONS ONLY

HEALTH & SAFETY
SIGNIFICANT RESIDUAL RISKS

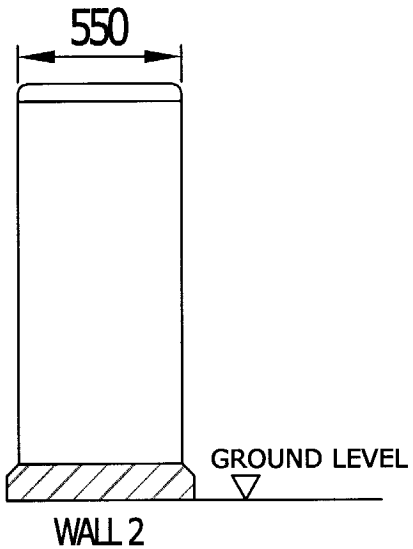

SIDE ELEVATION

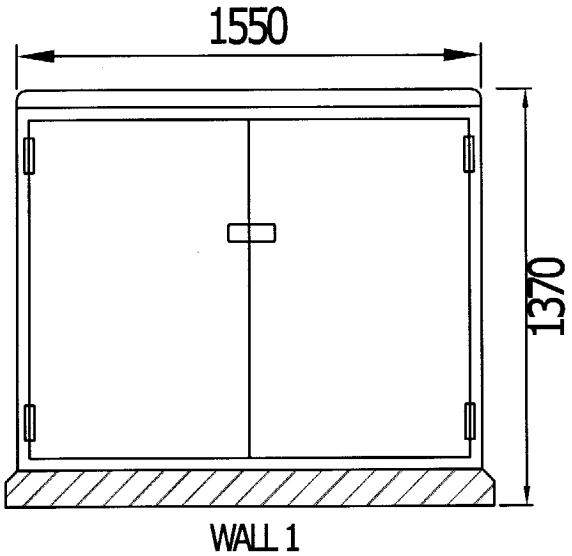

FRONT ELEVATION

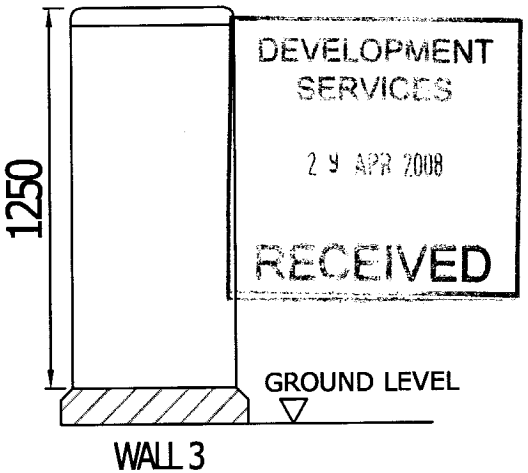

SIDE ELEVATION

DEVELOPMENT SERVICES
2 9 APR 2008
RECEIVED

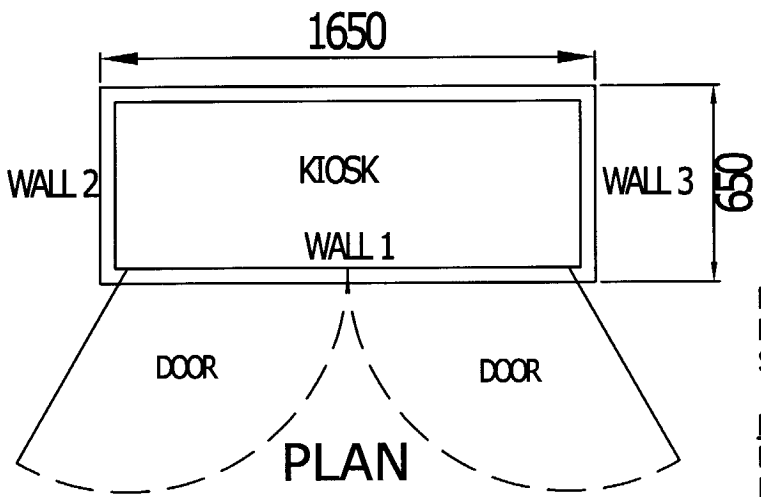

NO SIGNIFICANT RESIDUAL RISKS HAVE BEEN IDENTIFIED FROM DESIGN RISK ASSESSMENTS AT THIS STAGE OF THE PROJECT

NOTES
KIOSK TO BE OF GRP CONSTRUCTION. EXTERNAL FINISH SATIN GELCOAT, COLOUR BS4800 14-C-39 HOLLY GREEN.

STORAGE KIOSK

THIS DRAWING IS THE PROPERTY OF SEVERN TRENT WATER Ltd. AND MUST NOT BE COPIED OR REPRODUCED WITHOUT THEIR WRITTEN PERMISSION.

The material contained in this drawing has been based upon the Ordnance Survey map by Severn Trent Water Limited by permission of Ordnance Survey on behalf of the Controller of Her Majesty's Stationery Office.
© Crown copyright - Severn Trent Water Ltd - Licence number - WU298522
Document users, other than Severn Trent Water Business users, are advised that this document is provided for reference purpose only and no further copies should be made from it.

PROJECT TITLE
BAGWORTH SPS UID

Severn Trent Water

DRAWING TITLE
STORAGE KIOSK
PLAN AND ELEVATIONS

ISSUE STATUS: PLANNING

SCALE	DRG NO	REV	ORIGINAL SHEET SIZE
1: 25	S366641-CA033	-	A4