Layout Showing Adoptable Offsite Drainage

Scale 1:250

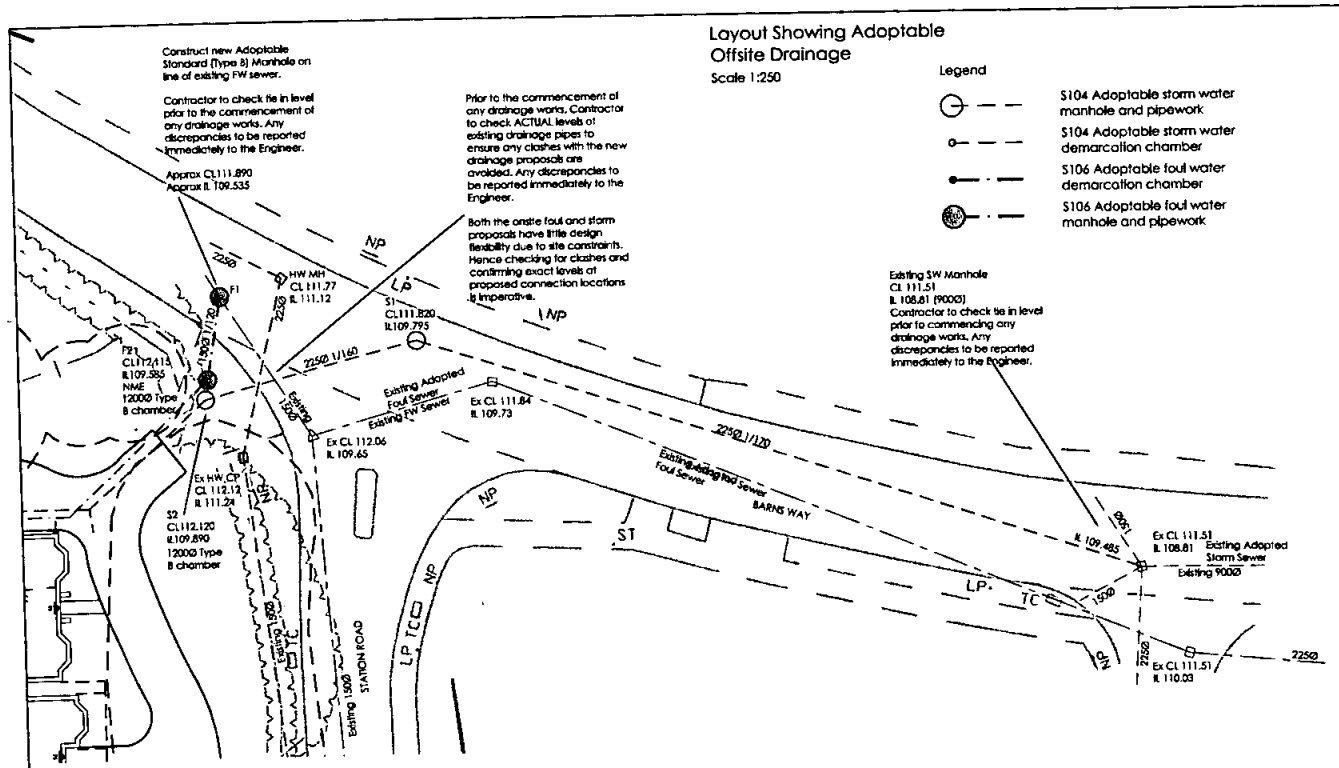

Legend

- S104 Adoptable storm water manhole and pipework
- S104 Adoptable storm water demarcation chamber
- S106 Adoptable foul water demarcation chamber
- S106 Adoptable foul water manhole and pipework

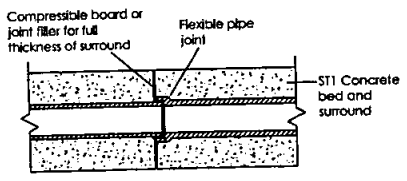

FLEXIBLE JOINT FOR CONCRETE SURROUND

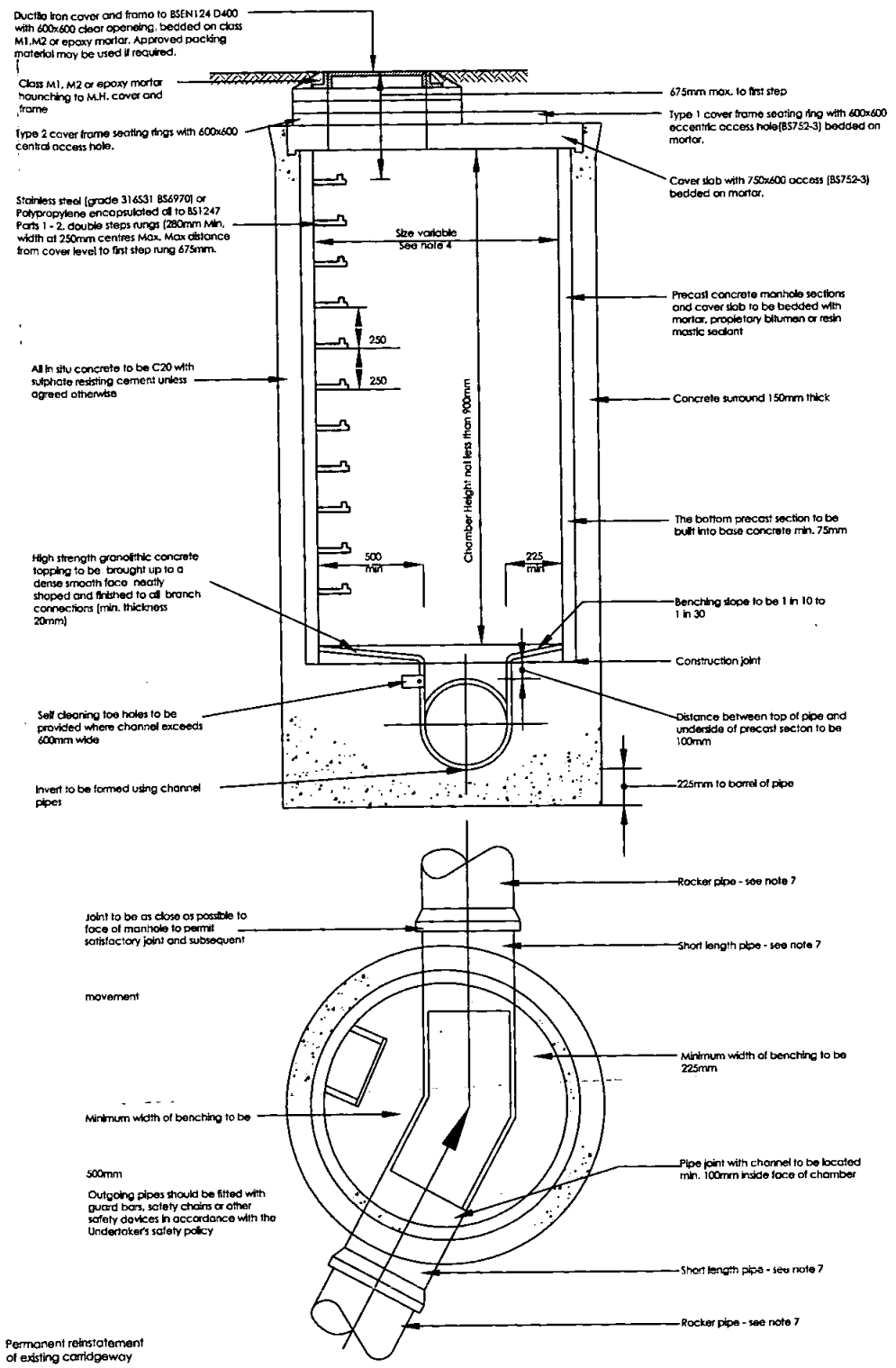

TYPICAL MANHOLE TYPE B

DEPTH OF SOFFIT 1.35 TO 3.0m

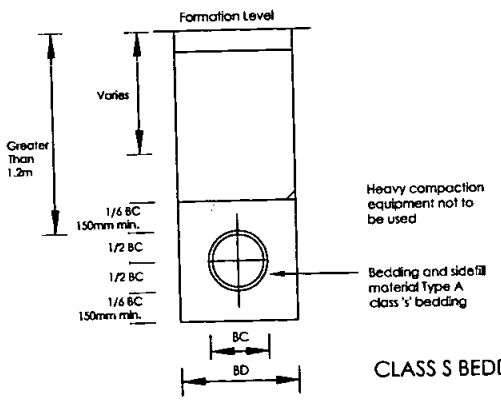

CLASS S BEDDING

GREATER THAN 1.2m OF COVER UNDER HIGHWAY

DEEP TRENCH

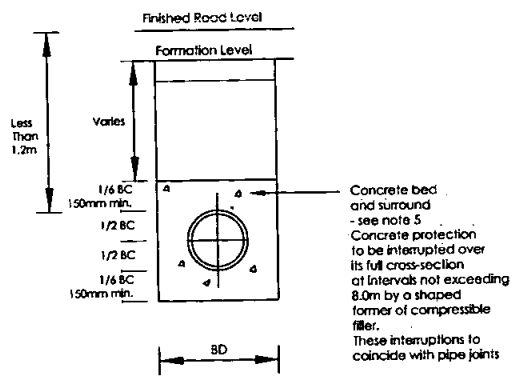

LESS THAN 1.2m OF COVER UNDER HIGHWAY

SHALLOW TRENCH

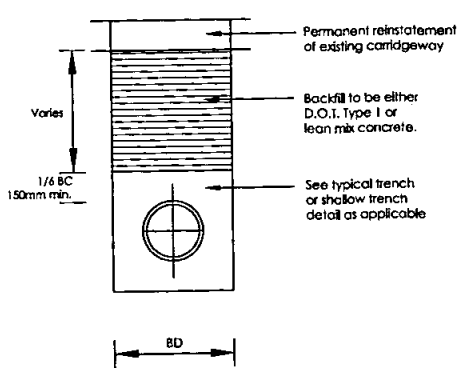

TRENCH IN EXISTING PUBLIC HIGHWAY

1. D400 covers & frames are to be used on all adoptable manholes. Covers to be embossed with either FW or SW to suit (only if to be adopted)
2. Cover and Reducing slabs, shaft and chamber rings to be bedded with mortar, proprietary bitumen or resin mastic sealant. All lifting holes to be pointed.
3. Ensure all slab openings and step irons, ladders are properly aligned.
4. Chamber Diameters

Dia. of largest pipe in M.H. (mm)	Dia. of chamber ring (mm)
Less than 375	1200
375-700	1500
750-900	1800
Greater than 900	Consult Undertaker

Above sizes are minimum and may need increasing for more than one incoming pipe to accommodate adequate benching.

5. Concrete mix to be in accordance with the chemical analysis report for buried concrete for the site concerned.
6. High strength topping to B.S. 8204 to be brought up to a dense smooth face neatly shaped and finished to all branch connections. Benching slope to be not flatter than 1 in 30.
7. Rocker/Short pipe lengths

Pipe dia. (mm)	Rocker pipe length (m)
150-600	0.6
601-750	1.0
over 750	1.25

Short length pipes to be similar length to rocker pipe.

9. Brick Manhole Widths. Chamber widths to be increased for pipes larger than 225mm dia. to give 225mm benching each side with the brickwork corbelled down to suit cover.
Manhole to large diameter sewers. Chambers with outgoing pipes greater than 450mm dia. to be fitted with guard bars, safety chains or other safety devices. Toe holes to be provided in benching of sewers greater than 600mm dia. for access to invert.
8. Bricks to be solid type and either class B engineering to B.S.3921 or special purpose concrete bricks to B.S. 6073 with Sulphate-resisting Portland cement binder. Brickwork to be in English bond.
10. All pipes built into manhole invert should be installed with soffits level.
11. PIPE BEDDING AND BACKFILL MATERIALS Granular bedding and sidefill Type A material shall be imported or selected as-dug material complying with the recommendations of W/x. No. 4-08-02. Selected fill Type B shall consist of uniform readily compactable material, free from vegetable matter, building rubbish and frozen materials, or materials susceptible to spontaneous combustion, and excluding clay of liquid limit greater than 80 and/or plastic limit greater than 55 and materials of excessively high moisture content. Clay lumps and stones retained on 75mm and 37.5mm sieves respectively shall be excluded from the fill material. Pipe bedding and fill materials to concrete pipes shall not contain more than 0.3 % sulphate, expressed as sulphur trioxide.

TRENCH WIDTHS

Pipe dia. (mm)	BC (mm)	BD(mm)
150	190	600
225	280	700
300	360	760
375	500	1050
450	580	1150
525	670	1200
600	750	1350
750	940	1560
900	1160	1760
1350	1620	2220
1500	1740	2340
1800	2090	2690

12. All Adoptable Drainage Works shall comply with the requirements of Sewers for Adoption 6th Edition Unless noted otherwise
13. All Adoptable Drainage pipes to be of spigot & socket type connection.
14. Safety chains to be added to all outgoing pipes over 450Ø.
15. All dimensions in millimetres unless specified otherwise

REV	DESCRIPTION	DATE

STATUS: PRELIMINARY

SCALE: NTS
DATE: Feb 2010
DRAWN: IDL

TITLE:

Section 104 & 106 Adoptable Drainage Construction Details

PROJECT: Station Road, Desford

DRG. No: 470-03-01

FILE REF: 470-07-02

33 The Point
Rockingham Road
Market Harborough
Leicestershire LE16 7QU
Tel: 01858 411570 Fax: 01858 411571
Email: info@infrades.co.uk URL: www.infrades.co.uk

DEVELOPMENT SERVICES
12 MAR 2010
RECEIVED

iD LTD
INFRASTRUCTURE DESIGN LIMITED
working for
CHARLES CHURCH
CHARLES CHURCH DEVELOPMENTS LTD
Davidson House
Meridian East
Meridian Business Park
Leicester
LE19 1WZ
tel: 0116 2815600

© Infrastructure Design Ltd

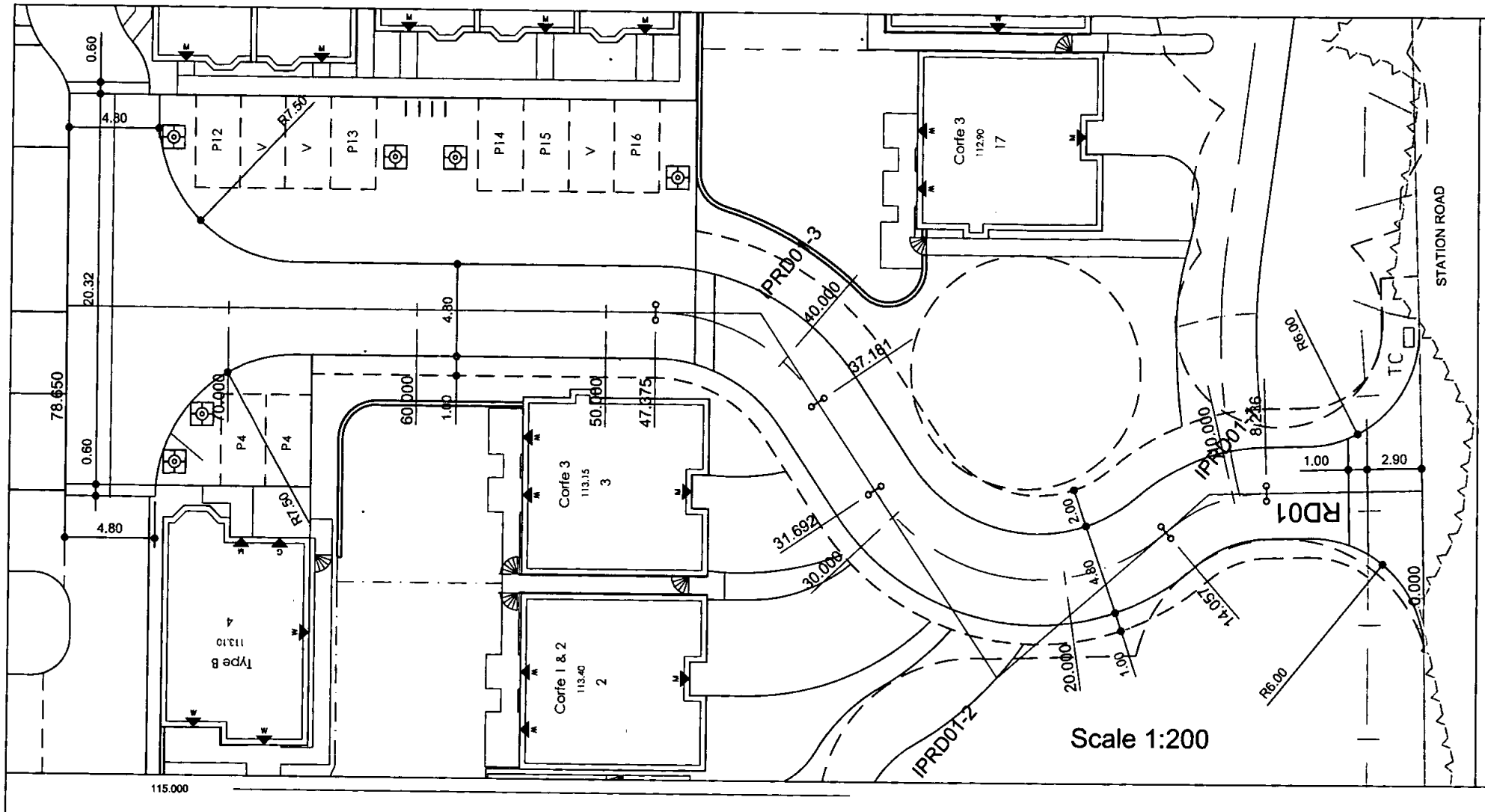

DATUM 110.000

RD01

CHAINAGE	0.000	5.000	8.236	10.000	14.057	17.806	20.000	25.000	26.376	30.000	31.692	35.000	37.181	40.000	45.000	47.375	50.000	55.000	60.000	65.000	70.000	75.000	78.650
EXISTING GROUND LEVEL	112.952			112.758			112.685			112.692			112.859			112.785			112.790			112.251		112.091
ALIGNMENT LEVEL	112.950	113.013		113.075	113.138	113.173	113.196	113.225	113.226	113.217	113.172	113.131	113.094	113.011	112.928	112.844	112.761	112.678	112.594	112.511	112.450		
VERTICAL ALIGNMENT		G= 1.250% 1: 80.0			L= 20.000 KF= -6.85636										G= -1.667% 1: -60.0								
HORIZONTAL ALIGNMENT			R= 8.400		R= 10.400									R= 10.400									

Scales 1:500 Hortz, 1:100 Vert

ALIGNMENT RD01

LOCATION	CHAINAGE	EASTING	NORTHING	RADIUS	BEARING	ANGLE	ARC LENGTH	TANL
SPRD01-1	0.000	2451.590	7264.232					
CPRD01-1	5.000	2448.305	7268.001					
TPRD01-1a	8.236	2446.179	7270.441		318.92850			
IPRD01-1		2444.186	7272.727	8.400		39.70158	5.821	3.033
CPRD01-2	10.000	2444.889	7271.640					
TPRD01-1b	14.057	2441.193	7273.214		279.22692			
IPRD01-2		2429.558	7275.104	10.400		97.15566	17.635	11.787
CPRD01-3	15.000	2440.270	7273.407					
CPRD01-4	20.000	2435.905	7275.747					
CPRD01-5	25.000	2433.118	7279.840					
CPRD01-6	30.000	2432.539	7284.758					
TPRD01-2b	31.692	2432.883	7288.412		16.38258			
CPRD01-7	35.000	2433.816	7289.586					
TPRD01-3a	37.181	2434.431	7291.679		16.38258			
IPRD01-3		2435.996	7297.002	10.400		56.15853	10.194	5.548
CPRD01-8	40.000	2434.852	7294.457					
CPRD01-9	45.000	2433.745	7299.284					
TPRD01-3b	47.375	2432.446	7301.266		320.22405			
CPRD01-10	50.000	2430.766	7303.284					
CPRD01-11	55.000	2427.567	7307.126					
CPRD01-12	60.000	2424.368	7310.969					
CPRD01-13	65.000	2421.170	7314.812					
CPRD01-14	70.000	2417.971	7318.655					
CPRD01-15	75.000	2414.772	7322.497					
EPRD01-1	78.650	2412.436	7325.303		320.22405			
JPRD01-1	0.000	2413.972	7323.458					
EPRD01-2	10.000	2406.286	7317.060		230.22405			
EPD01-2	11.000	2422.426	7330.496		50.22405			

DEVELOPMENT SERVICES
12 MAR 2010
RECEIVED

REV	DESCRIPTION	DATE

SCALE : As Shown
DATE : FEB 2010
DWN : IDL CHK RH

TITLE :

Road Longitudinal Section & Setting Out

PROJECT :
Station Road, Desford

ORG. No: 470-04-01

File Reference: 470-04-01

33 The Point
Rockingham Road
Market Harborough
Leicestershire LE16 7QU
Tel: 01858 411570 Fax: 01858 411571
Email: info@inmodes.co.uk URL: www.inmodes.co.uk

INFRASTRUCTURE DESIGN LIMITED
working for
CHARLES CHURCH
CHARLES CHURCH DEVELOPMENTS LTD
Dovebank House
Meridian East
Meridian Business Park
Leicester
LE19 1WZ
tel: 0116 2813600