A1 Size
Use figured dimensions only

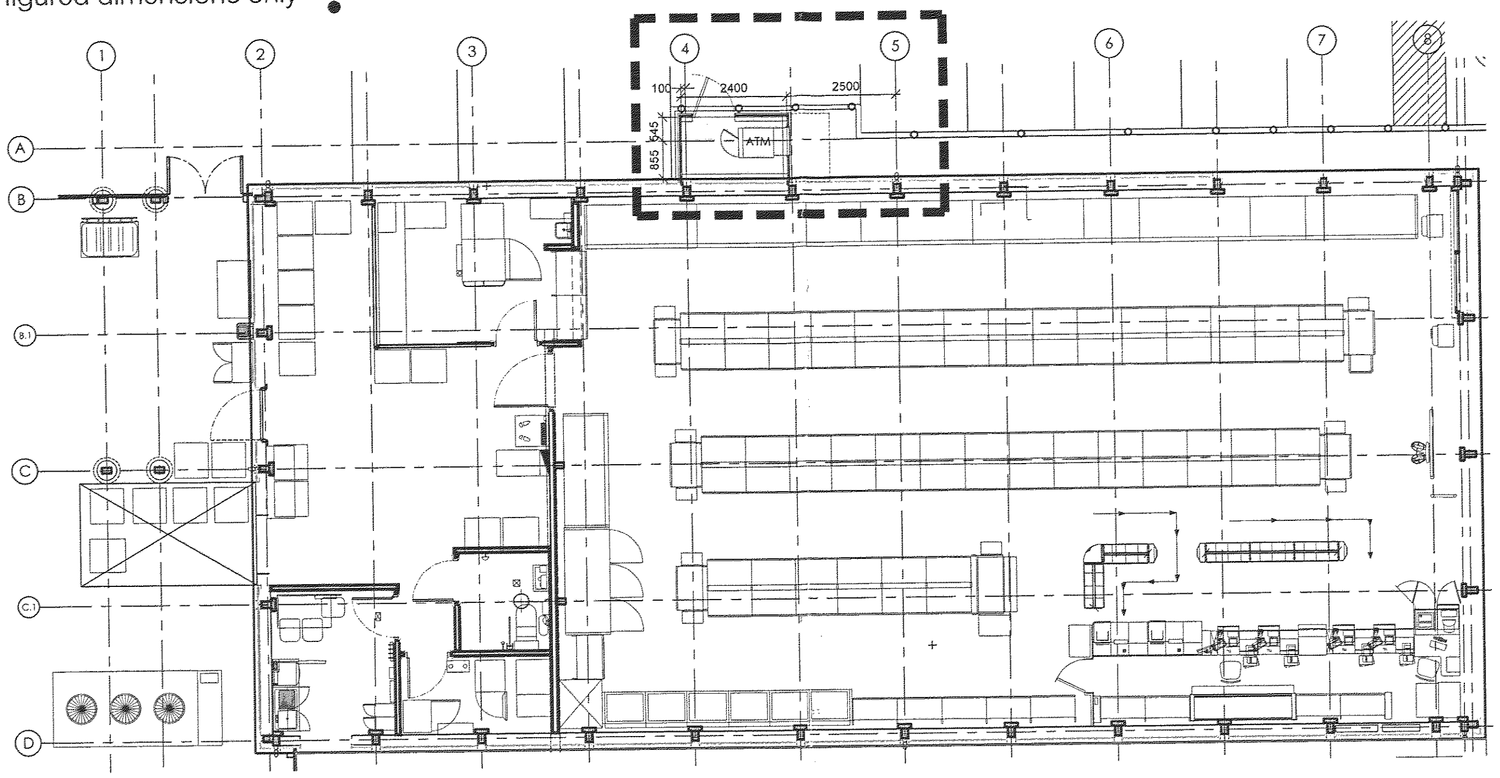

Location Plan 1:100

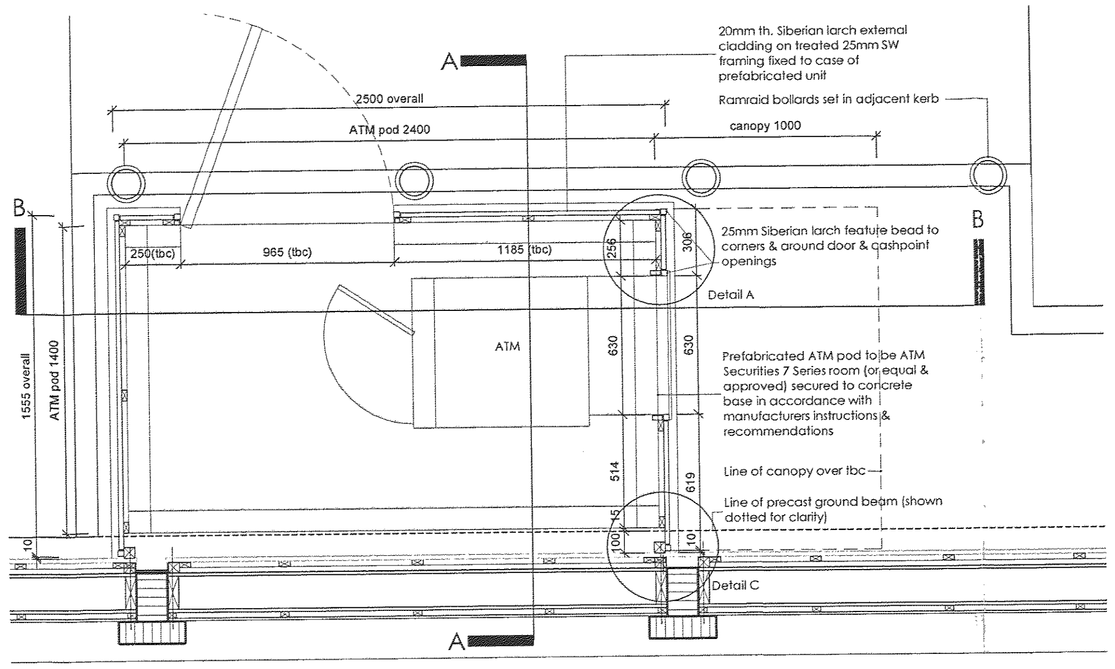

Plan 1:20

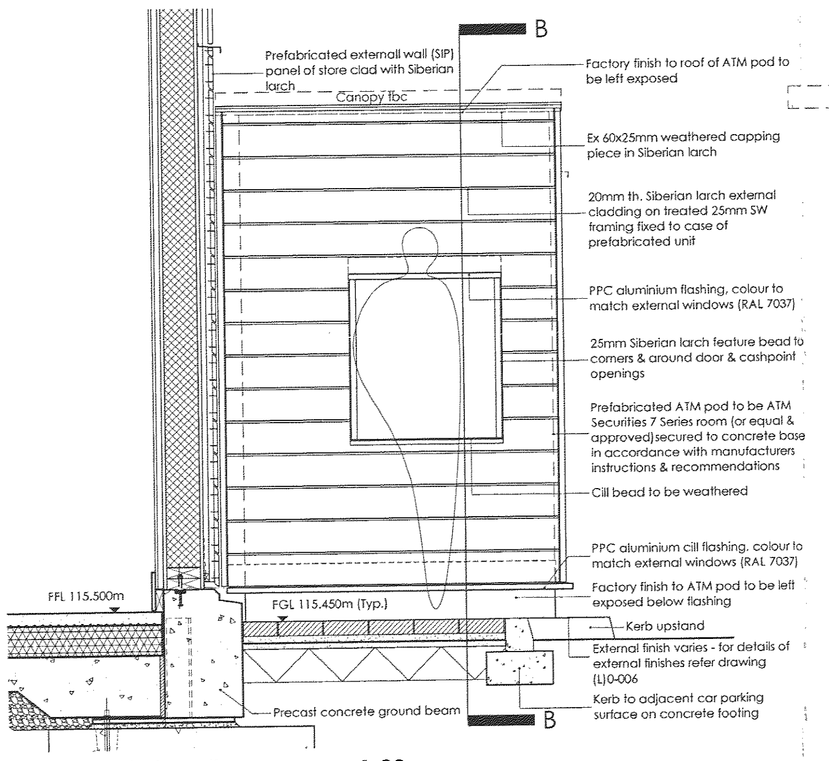

Front Elevation 1:20

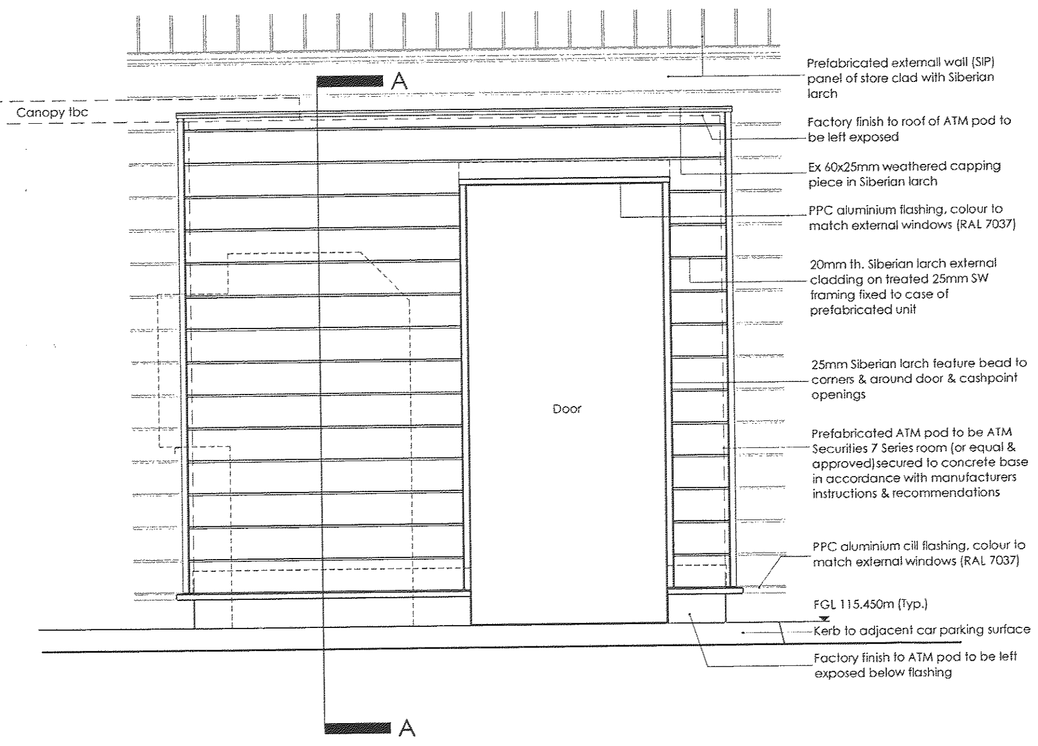

Side Elevation 1:20

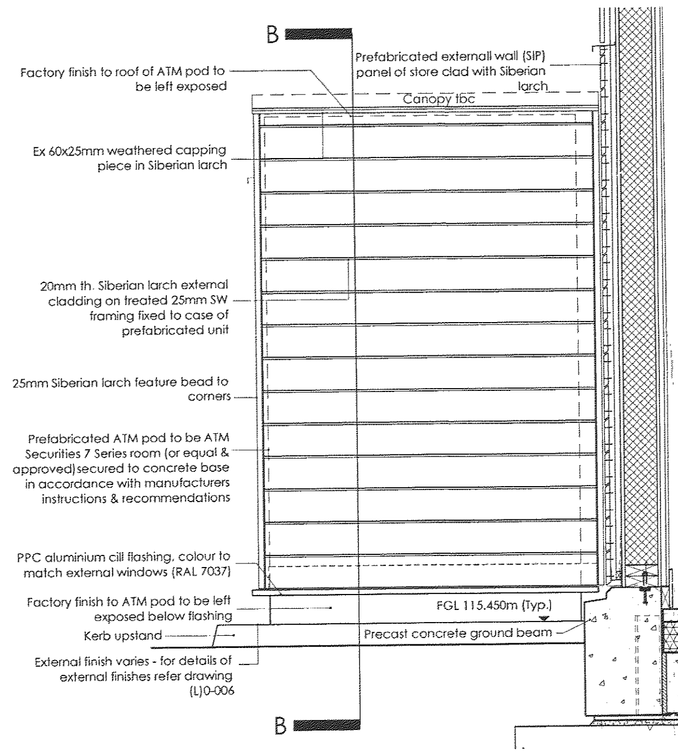

Rear Elevation 1:20

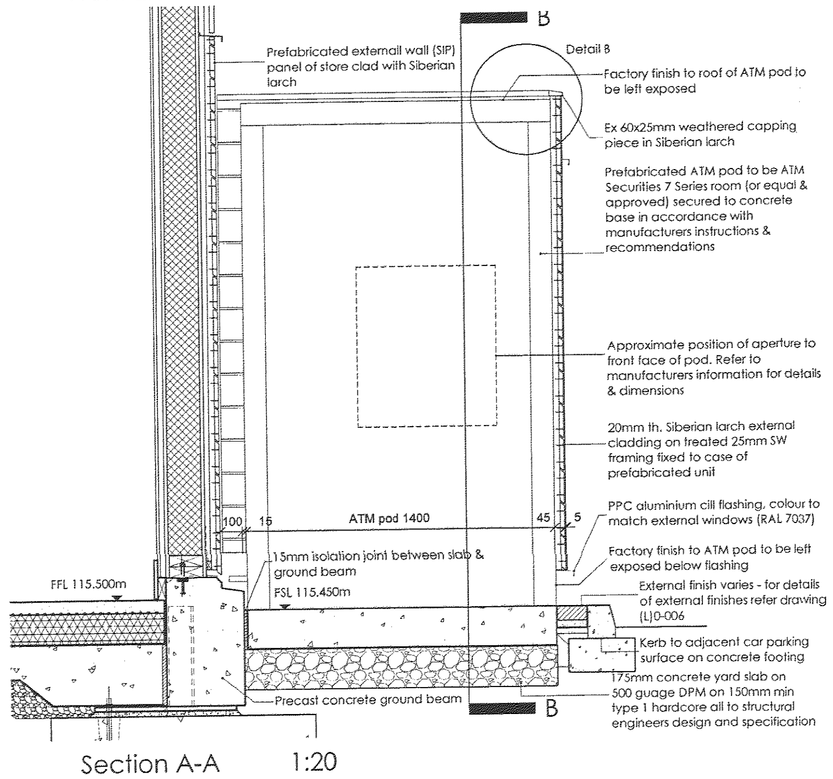

Section A-A 1:20

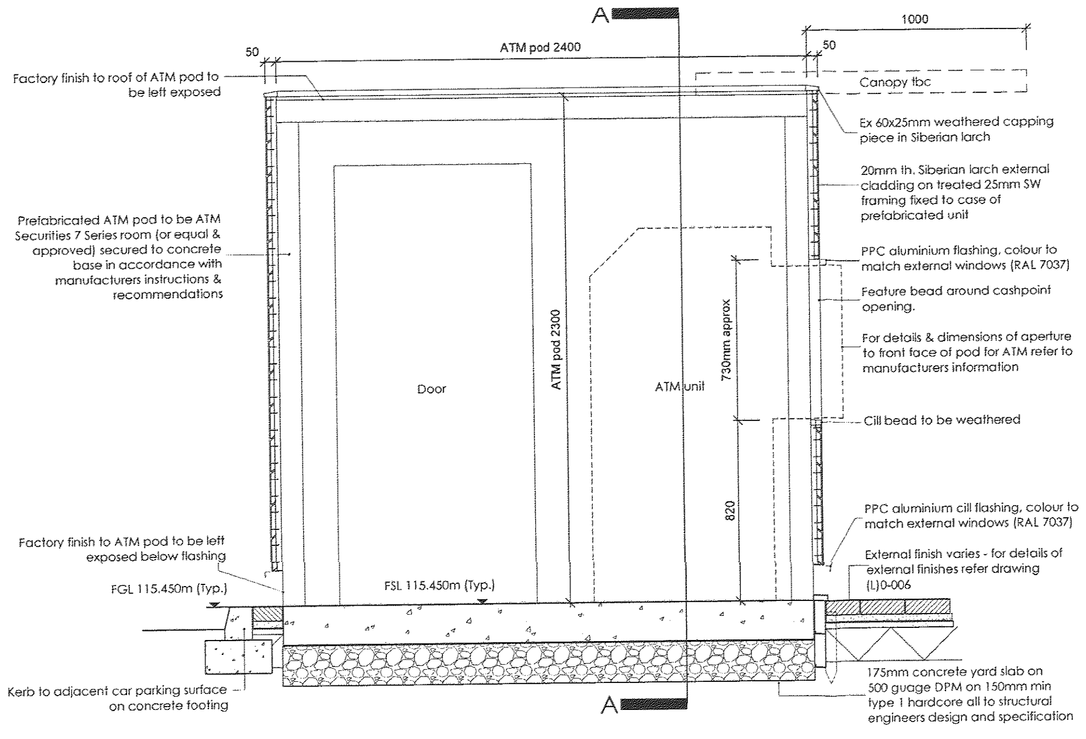

Section B-B 1:20

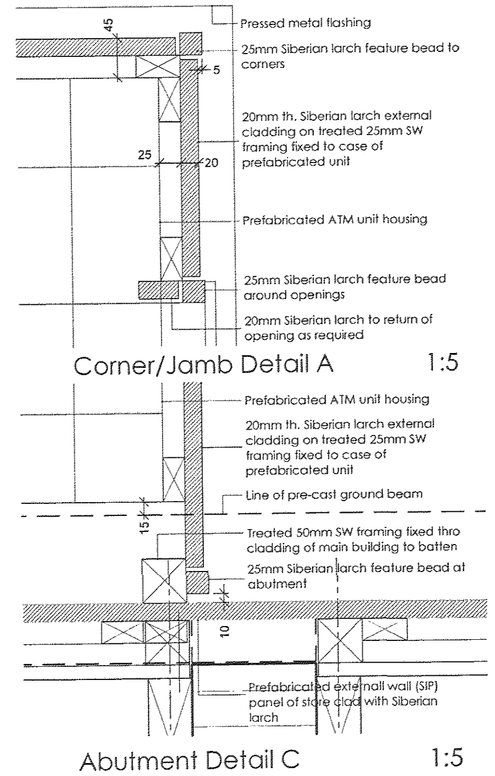

Corner/Jamb Detail A 1:5

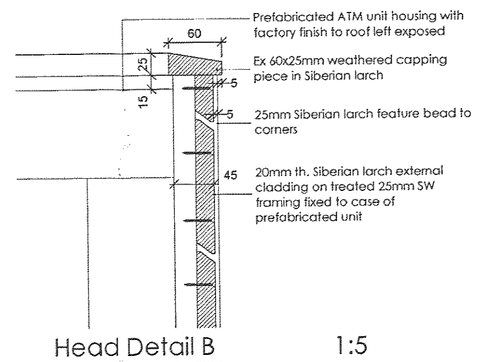

Head Detail B 1:5

Abutment Detail C 1:5

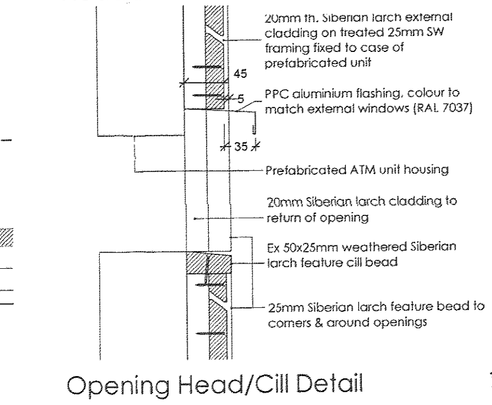

Opening Head/Cill Detail 1:5

Notes:

Power & data supplies to be provided as per manufacturers requirements

Concrete base slab dimensions & grade to be confirmed & approved by Struct. Eng. & ATM unit supplier / manufacturer

Position & numbers of Ramraid bollards to be confirmed

Rev	Description	Date	BY

DEVELOPMENT SERVICES
25 MAR 2008
RECEIVED

TESCO
working with
barr
construction
Heathfield House
Fairways Business Park
Livingston EH54 8AF

T 01506 441 400
F 01506 441 410

CONSTRUCTION

Client
Tesco Stores Ltd

Project Title
Express Store, London Road
Hinckley, Leicestershire

Drawing Title
ATM Pod Details

Scale	Date
1:100, 1:20 (A1)	11.02.08
Drawn by: JS	Checked by: PB
Approved by: IC	
Job Code: ETH	Drawing No.: (C)9-004
Rev.	