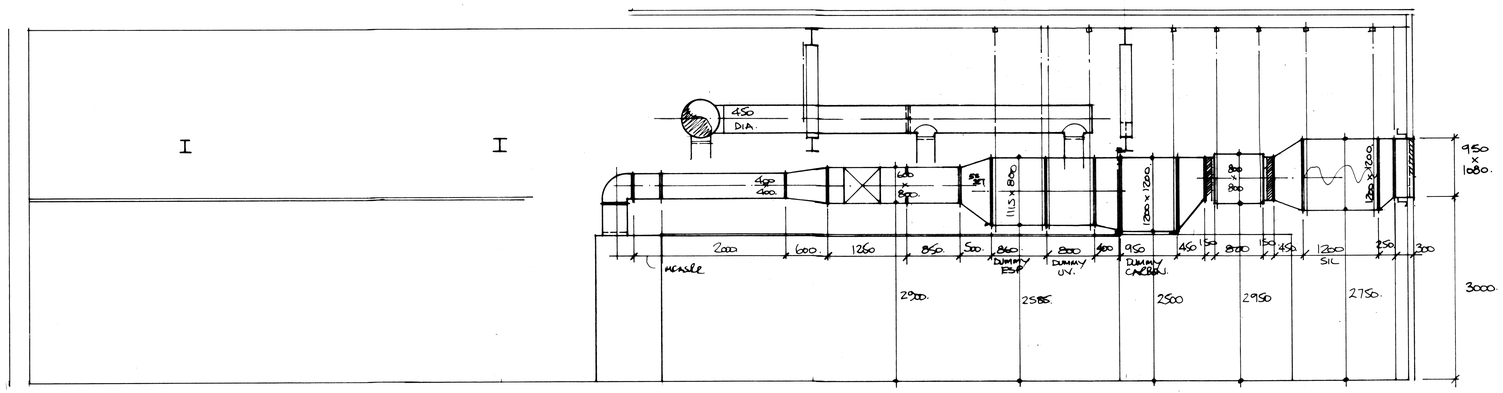

SECTION.

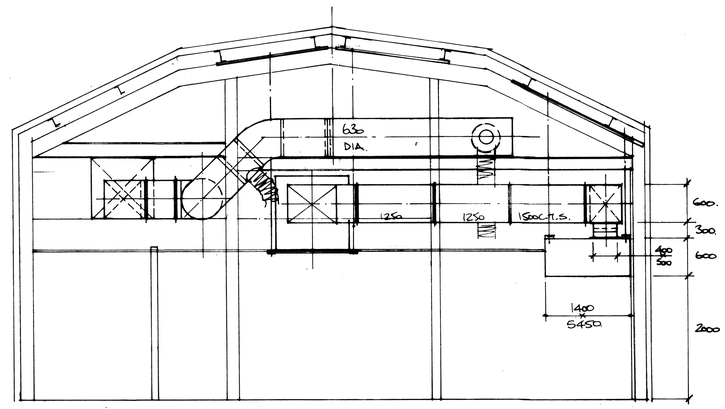

SECTION ON A-A.

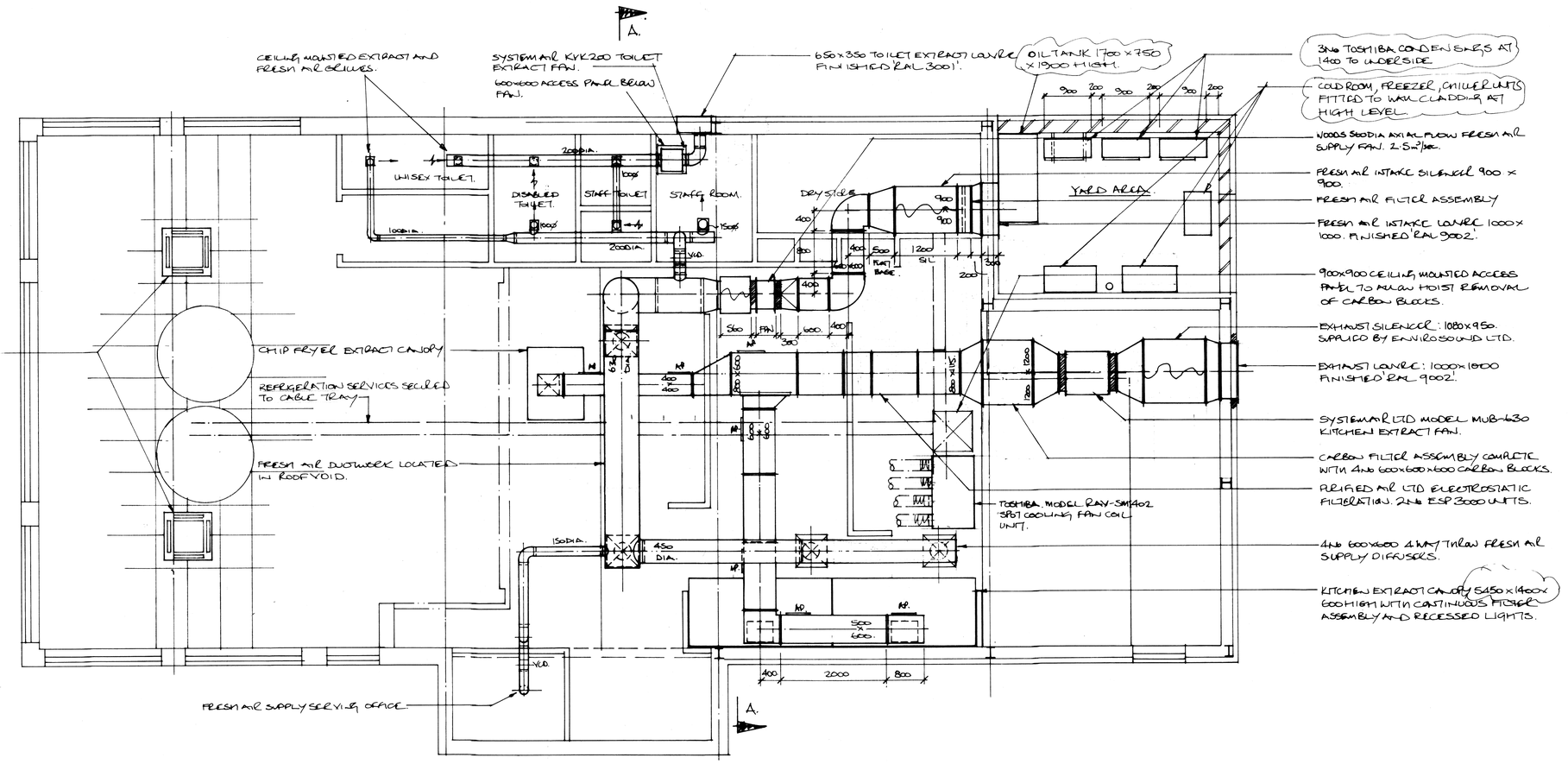

PLAN VIEW AT HIGH LEVEL.

A. WORKING DETAILS ADDED. MINOR MODIFICATIONS. SECTIONS ADDED. 22/08/11.

REVISION	DATE

TITLE
PROPOSED VENTILATION SERVICES.

SITE
KFC DRIVE THROUGH – COVENTRY ROAD – HINCKLEY.

CLIENT
SME GROUP LTD.

Delta Services
Vickers House
Priestley Road
Basingstoke
Hants RG24 9NP

DATE	SCALE	DRG. No
26/04/11.	1:50 e.a.l.	31229/1A