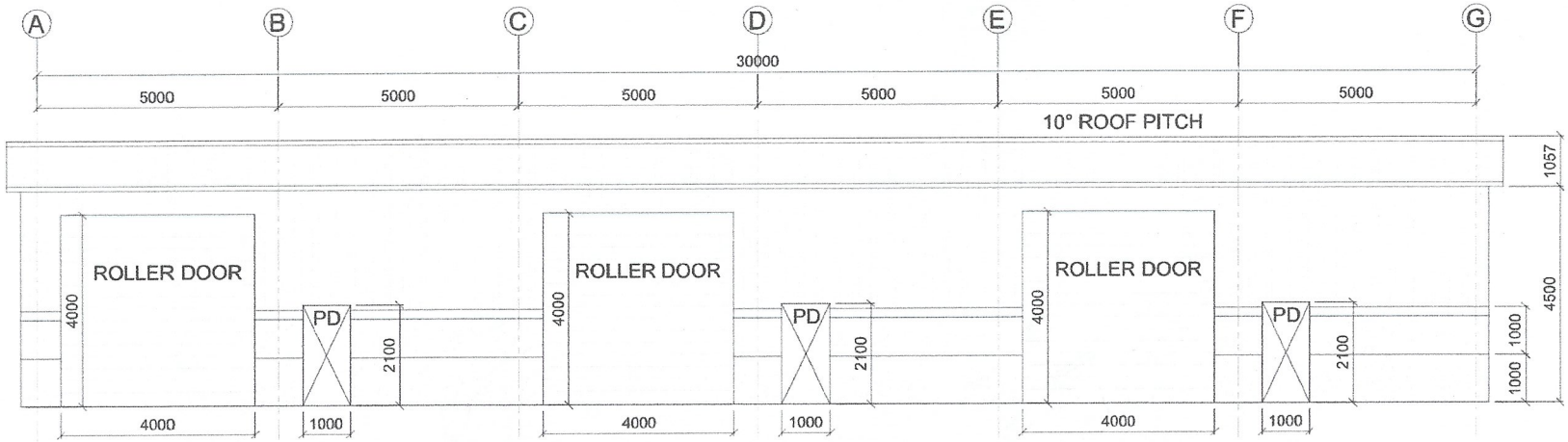

PROPOSED FRONT ELEVATION

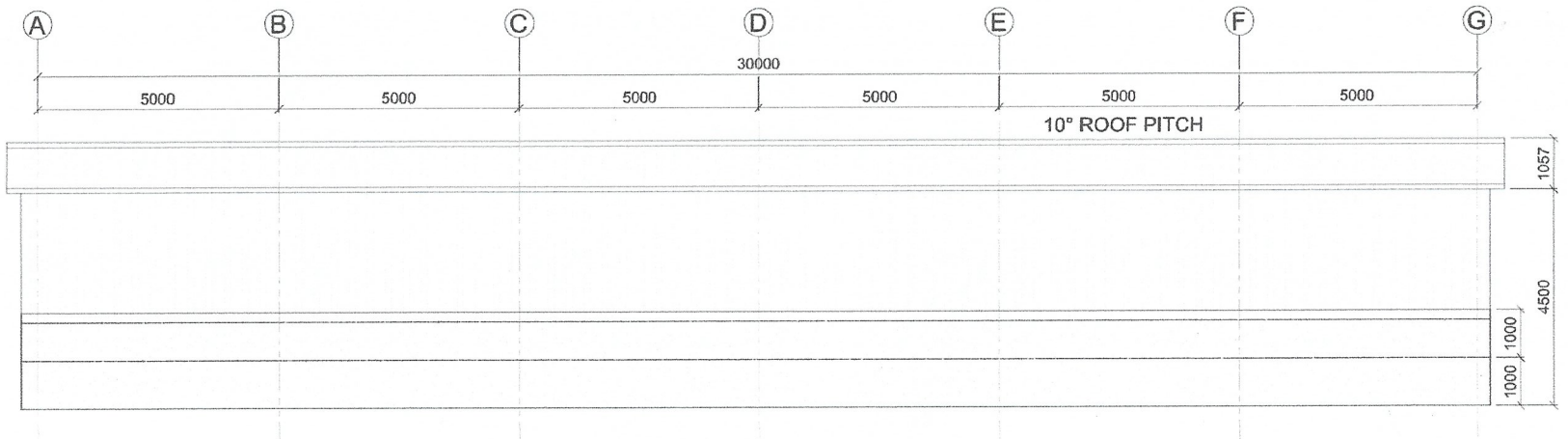

PROPOSED REAR ELEVATION

NOTE:

ROOF CLADDING : COMPOSITE METAL ROOF CLADDING WITH 40mm INSULATION CORE.
COLOUR : JUNIPER GREEN
WALL CLADDING : SINGLE SKIN METAL ROOF CLADDING.
COLOUR : JUNIPER GREEN.

REV.	DATE	DESCRIPTION	BY
00	28/11/25	ISSUED FOR APPROVAL	AA

CLIENT:
WYKES TRANSPORT
DADLINGTON LANE
STAPLETON
LEICESTER

JOB TITLE: WYKES TRANSPORT
DRAWING TITLE: PROPOSED FRONT & REAR ELEVATIONS

VERIFIED BY:	DESIGNED BY:	DRAWN BY:
PROJECT NO:	DRAWING NO:	REVISION: 00
SHEET SIZE: A3	SCALE: 1:100	DATE: 28/11/25

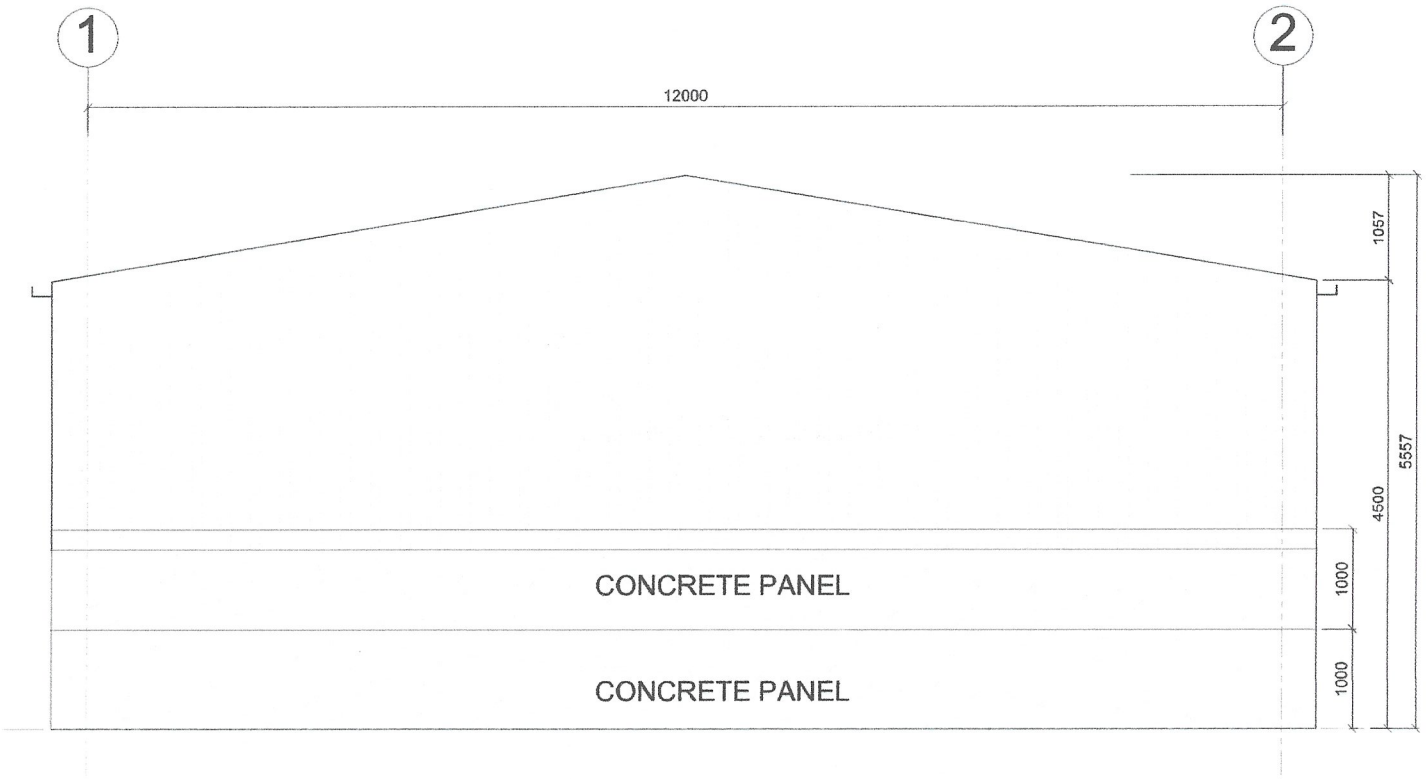

PROPOSED GABLE ELEVATION

NOTE:

ROOF CLADDING : COMPOSITE METAL ROOF CLADDING WITH 40mm INSULATION CORE.
COLOUR : JUNIPER GREEN
WALL CLADDING : SINGLE SKIN METAL ROOF CLADDING.
COLOUR : JUNIPER GREEN.

REV.	DATE	DESCRIPTION	BY
00	28/11/25	ISSUED FOR APPROVAL	AA

CLIENT
WYKES TRANSPORT
DADLINGTON LANE
STAPLETON
LEICESTER

JOB TITLE: WYKES TRANSPORT
DRAWING TITLE: PROPOSED GABLE ELEVATION

VERIFIED BY:	DESIGNED BY:	DRAWN BY:
PROJECT NO:	DRAWING NO:	REVISION: 00
SHEET SIZE: A3	SCALE: 1:50	DATE: 28/11/25

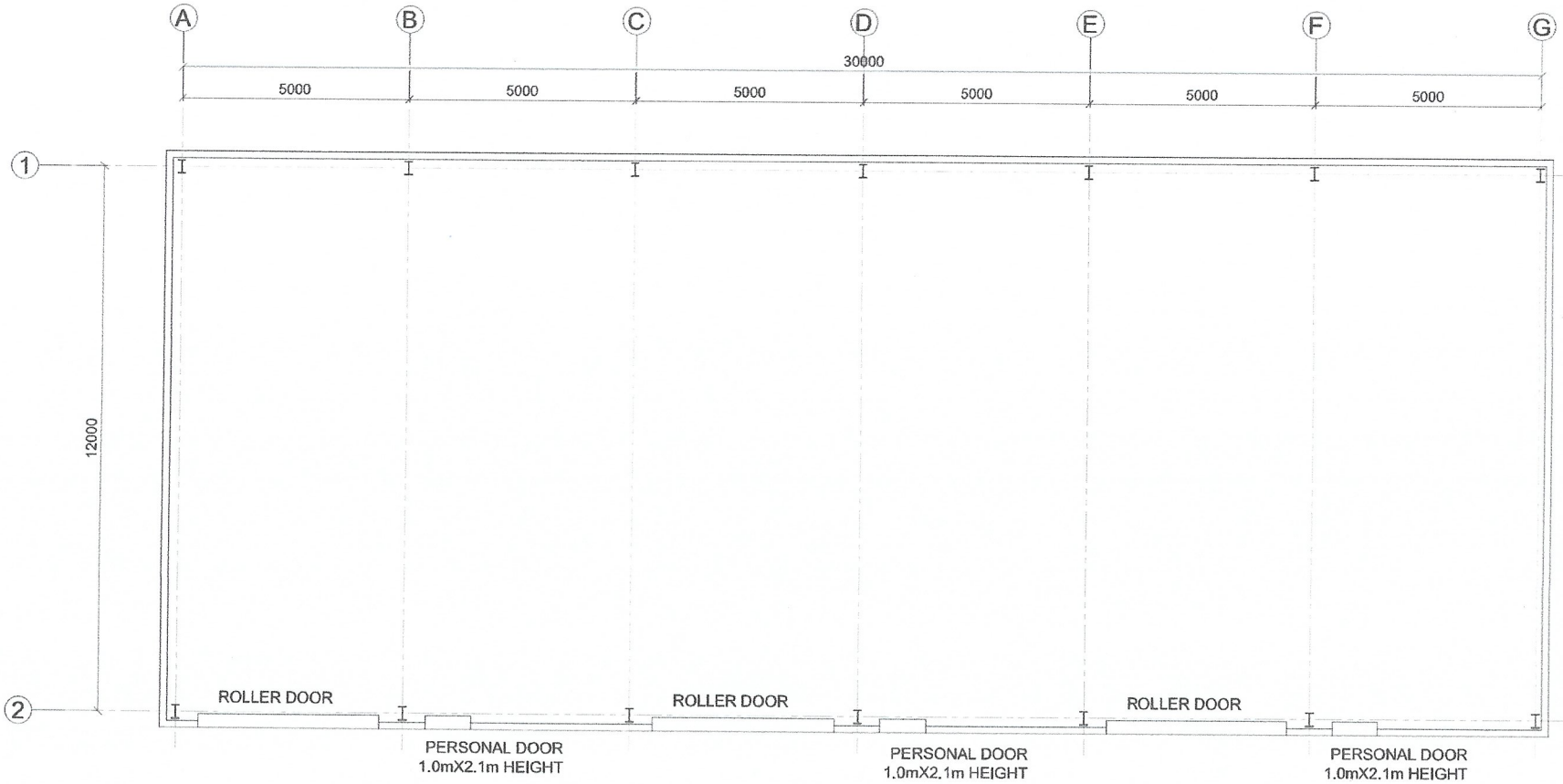

PROPOSED PLAN

NOTE:

ROOF CLADDING : COMPOSITE METAL ROOF CLADDING WITH 40mm INSULATION CORE.
COLOUR : JUNIPER GREEN
WALL CLADDING : SINGLE SKIN METAL ROOF CLADDING.
COLOUR : JUNIPER GREEN.

REV.	DATE	DESCRIPTION	BY
00	28/11/25	ISSUED FOR APPROVAL	AA

CLIENT:
WYKES TRANSPORT
DADLINGTON LANE
STAPLETON
LEICESTER

JOB TITLE: WYKES TRANSPORT

DRAWING TITLE: PROPOSED PLAN

VERIFIED BY:	DESIGNED BY:	DRAWN BY:
PROJECT NO:	DRAWING NO: S0200	REVISION: 00
SHEET SIZE: A3	SCALE: 1:100	DATE: 28/11/25