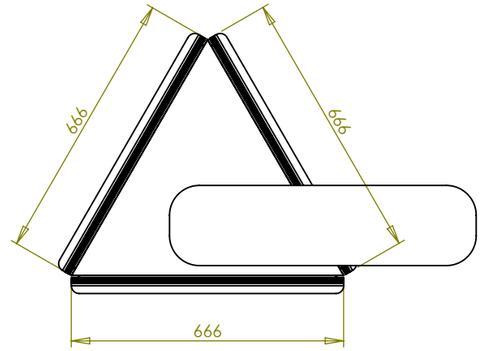

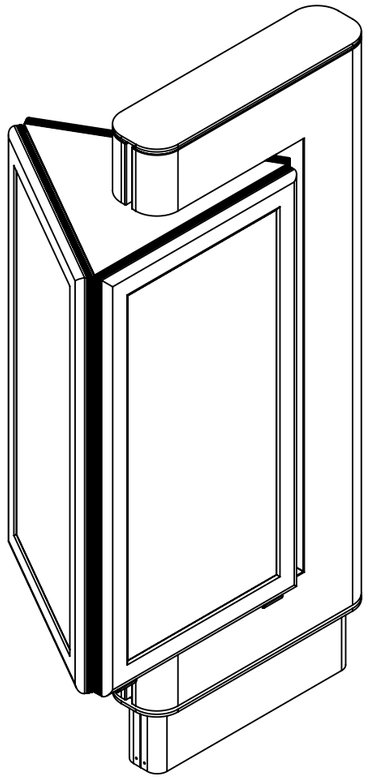

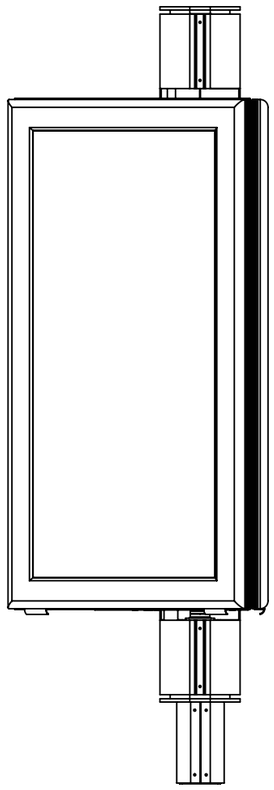

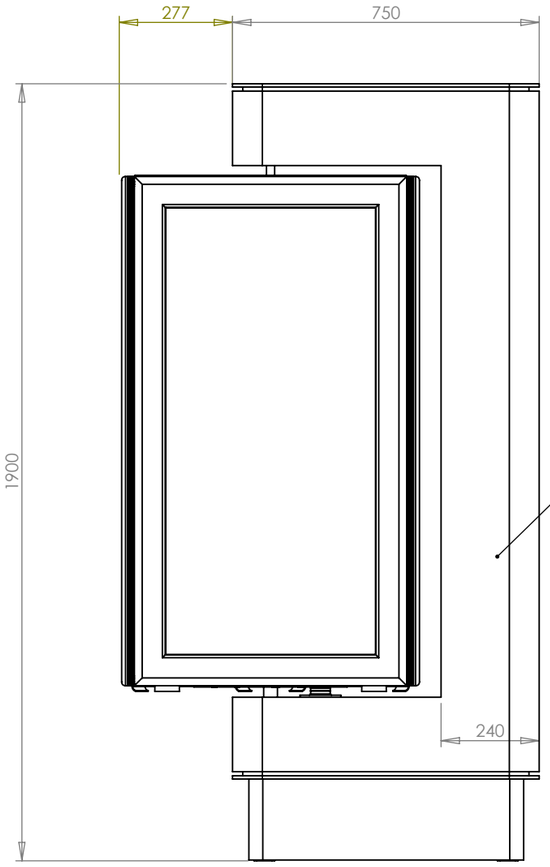

Panels & plates as standard double unit

UNLESS OTHERWISE SPECIFIED: DIMENSIONS ARE IN MILLIMETERS SURFACE FINISH: TOLERANCES: LINEAR: ANGULAR:		FINISH:			DEBUR AND BREAK SHARP EDGES	TITLE: Tripple Unit - Single
	NAME	SIGNATURE	DATE			email: matthewbullough@butterfieldsigns.co.uk Web: www.butterfieldsigns.co.uk
DRAWN	M.Bullough		13/12/2007			
CHK'D						
APPV'D						
MFG				MATERIAL:		DWG NO. Tripple Unit - Single A3
Q.A						
DO NOT SCALE DRAWING				WEIGHT:		SCALE:1:15 SHEET 1 OF 10

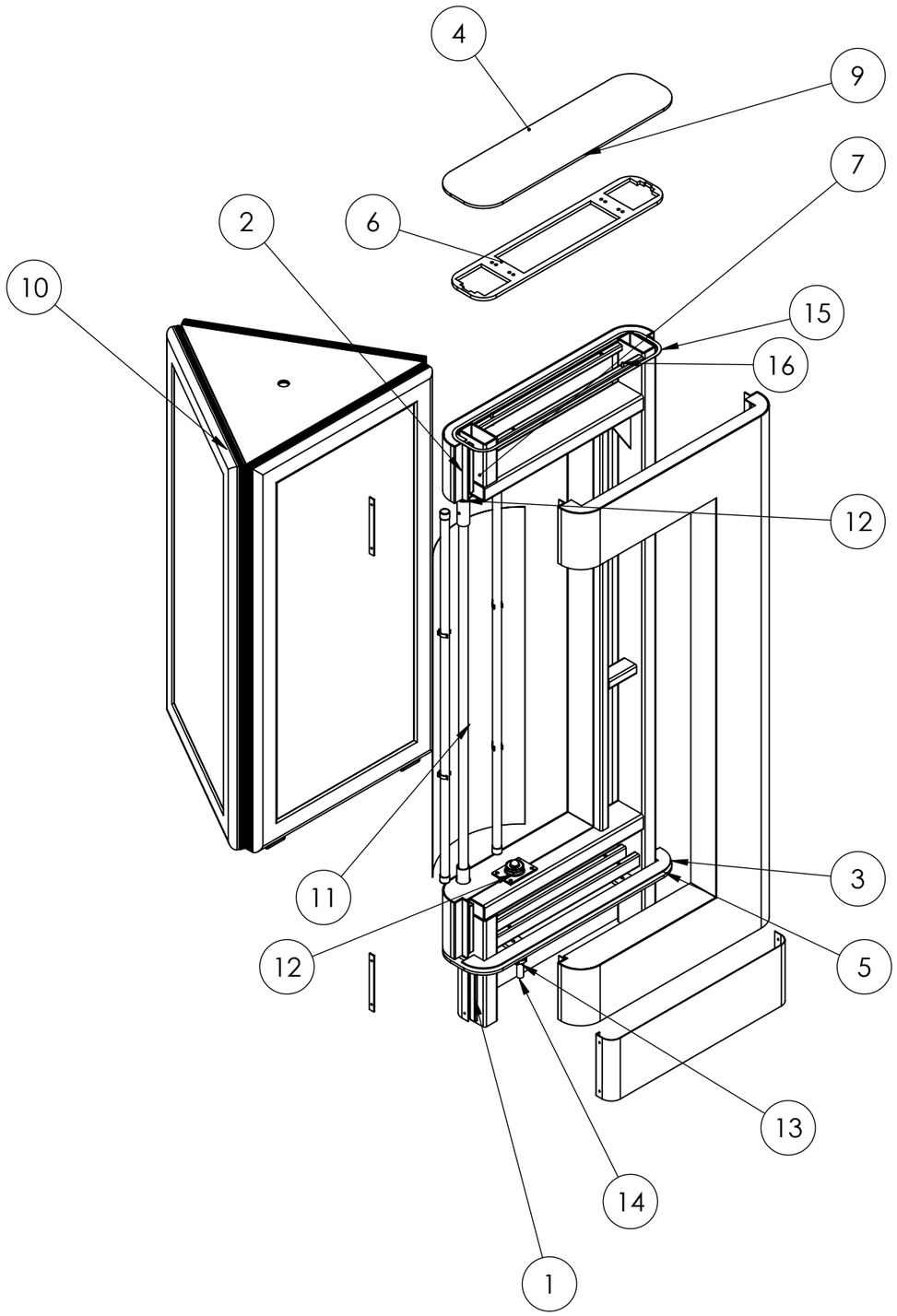

ITEM NO.	PART NUMBER	SW-Configuration Name	DESCRIPTION	Default/QTY.
1	Steelwork S Tripple	Default<As Machined>	Mild Steel	1
2	Panel Assembly S T	Default		1
3	Bottom Panel S T	Default	3mm aliminium	2
4	8mm Plate S T	top		1
5	8mm Plate S T	bottom		1
6	10mm Plate S T	top	10mm aliminium	2
7	B18.22M - Plain washer, 20 mm, regular	B18.22M - Plain washer, 20 mm, regular		1
8	B18.2.4.5M - Hex jam nut, M20 x 2.5 --W-N	B18.2.4.5M - Hex jam nut, M20 x 2.5 --W-N		2
9	B18.2.3.6M - Heavy hex bolt M20 x 2.5 x 100 --100N	B18.2.3.6M - Heavy hex bolt M20 x 2.5 x 100 --100N		1
10	Tripple Box Unit	Default	3 Sided Poster Box Unit	1
11	Lighting Assembly	Default		1
12	Omni Track Ball	Default		1
13	Terry Clip	Default		1
14	Plug	Default	Buccaneer PX 0732/S	1
15	Rubber seal	Default	Rubber Seal	1
16	B18.2.3.5M - Hex bolt M6 x 1.0 x 30 --30N	B18.2.3.5M - Hex bolt M6 x 1.0 x 30 --30N		4

Note: All welds, fixings & connections as Tripple Unit - Double

UNLESS OTHERWISE SPECIFIED:
DIMENSIONS ARE IN MILLIMETERS
SURFACE FINISH:
TOLERANCES:
LINEAR:
ANGULAR:

FINISH:

DEBUR AND BREAK SHARP EDGES

	NAME	SIGNATURE	DATE
DRAWN	M.Bullough		13/12/2007
CHK'D			
APPV'D			
MFG			
Q.A			

DO NOT SCALE DRAWING

MATERIAL:

WEIGHT:

TITLE: Tripple Unit - Single

email: matthewbullough@butterfieldsigns.co.uk Web: www.butterfieldsigns.co.uk

DWG NO. Tripple Unit - Single

A3

SCALE:1:15

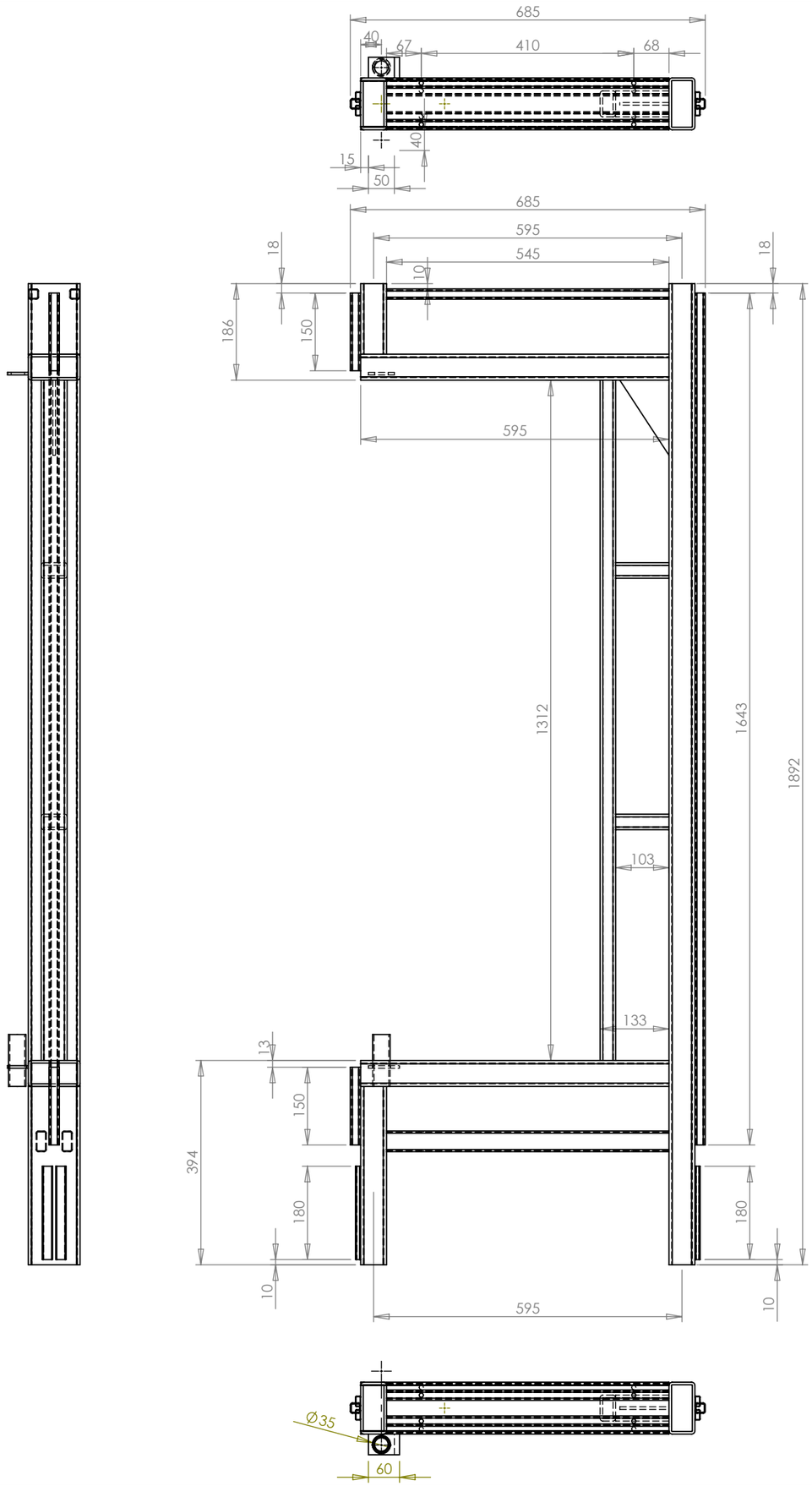

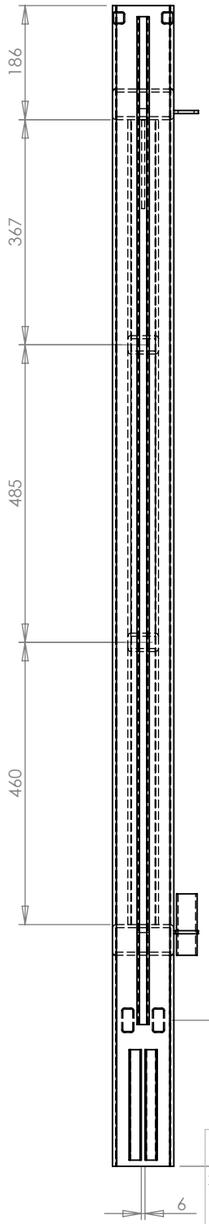

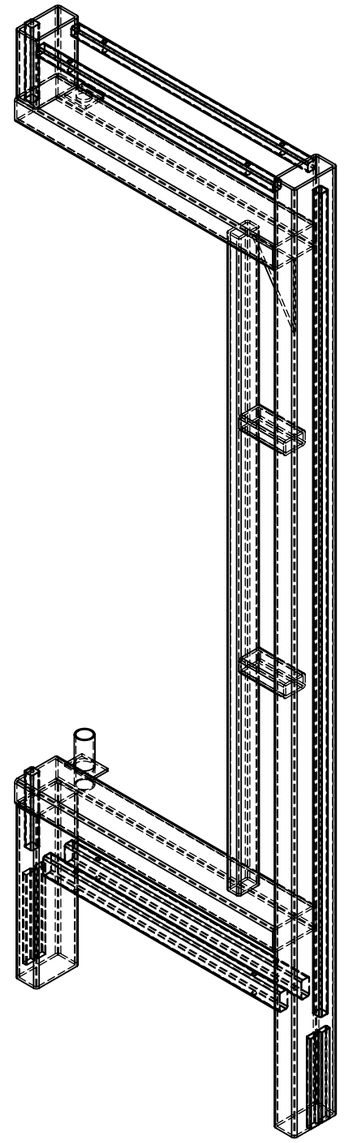

UNLESS OTHERWISE SPECIFIED: DIMENSIONS ARE IN MILLIMETERS SURFACE FINISH: TOLERANCES: LINEAR: ANGULAR:		FINISH:		DEBUR AND BREAK SHARP EDGES	TITLE: Mild SteelSteelwork S Tripple	
	NAME	SIGNATURE	DATE			
DRAWN	M.Bullough		06/12/2005			
CHK'D						
APPV'D						
MFG				MATERIAL:	DWG NO. Tripple Unit - Single	A3
Q.A						
DO NOT SCALE DRAWING				WEIGHT:	SCALE:1:10	SHEET 3 OF 10

email: matthewbullough@butterfieldsigns.co.uk Web: www.butterfieldsigns.co.uk

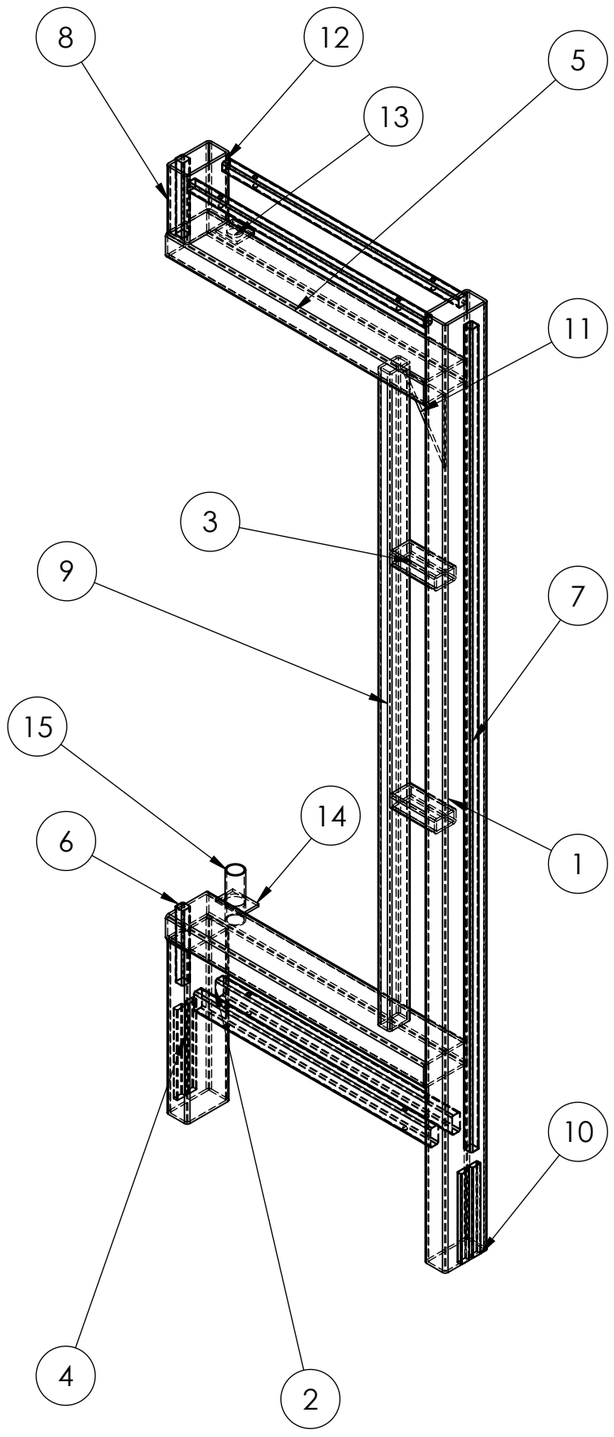

ITEM NO.	QTY.	DESCRIPTION	LENGTH
15	1	PIPE 33.70 X 3.2	100
14	1	5mm Plate Bottom	
13	2	5mm Plate Top	
12	2	TUBE, SQUARE 20 X 20 X 2	545
11	1	Gusset - 5mm steel	
10	4	ERW 20 X 10 X 1	180
9	1	TUBE, RECTANGULAR 50 X 30 X 5	1312
8	1	TUBE, RECTANGULAR 100 X 50 X 5	136
7	1	TUBE, SQUARE 20 X 20 X 2	1643
6	2	TUBE, SQUARE 20 X 20 X 2	150
5	2	TUBE, RECTANGULAR 100 X 50 X 5	595
4	1	TUBE, RECTANGULAR 100 X 50 X 5	344
3	2	TUBE, RECTANGULAR 50 X 30 X 5	103
2	2	TUBE, RECTANGULAR 40 X 20 X 2	545
1	1	TUBE, RECTANGULAR 100 X 50 X 5	1892

UNLESS OTHERWISE SPECIFIED:
DIMENSIONS ARE IN MILLIMETERS
SURFACE FINISH:
TOLERANCES:
LINEAR:
ANGULAR:

FINISH:

DEBUR AND BREAK SHARP EDGES

	NAME	SIGNATURE	DATE
DRAWN	M.Bullough		06/12/2005
CHK'D			
APPV'D			
MFG			
Q.A			

DO NOT SCALE DRAWING

MATERIAL:

WEIGHT:

TITLE: Mild SteelSteelwork S Tripple

email: matthewbullough@butterfieldsigns.co.uk Web: www.butterfieldsigns.co.uk

DWG NO. Tripple Unit - Single

A3

SCALE:1:10

SHEET 4 OF 10

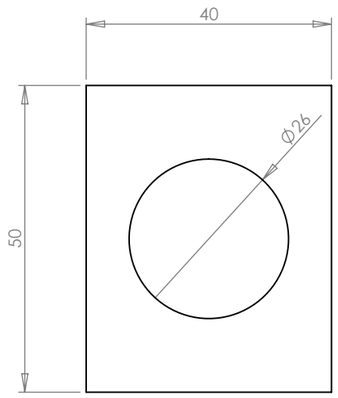

5mm plate - 2 Off

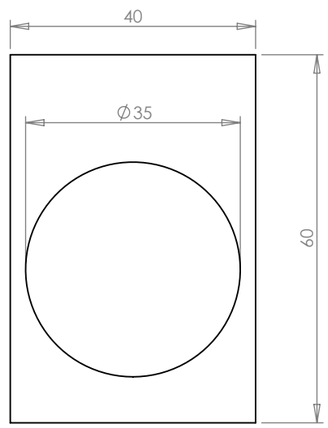

5mm plate - 1 Off

UNLESS OTHERWISE SPECIFIED: DIMENSIONS ARE IN MILLIMETERS UNIT SYSTEM : MMGS TOLERANCES: LINEAR: ANGULAR:	FINISH:				DEBUR AND BREAK SHARP EDGES	DO NOT SCALE DRAWING / REVISION
	NAME	SIGNATURE	DATE			TITLE: Top Support Plate
DRAWN	M.Bullough		20/12/2007			
CHK'D						
APPV'D						
MFG						email: matthewbullough@butterfieldsigns.co.uk Web: www.butterfieldsigns.co.uk
Q.A				MATERIAL:		DWG NO. Tripple Unit - Single / A3
				WEIGHT:		SCALE:1:1 / SHEET 5 OF 10

All folds as 1900 unit

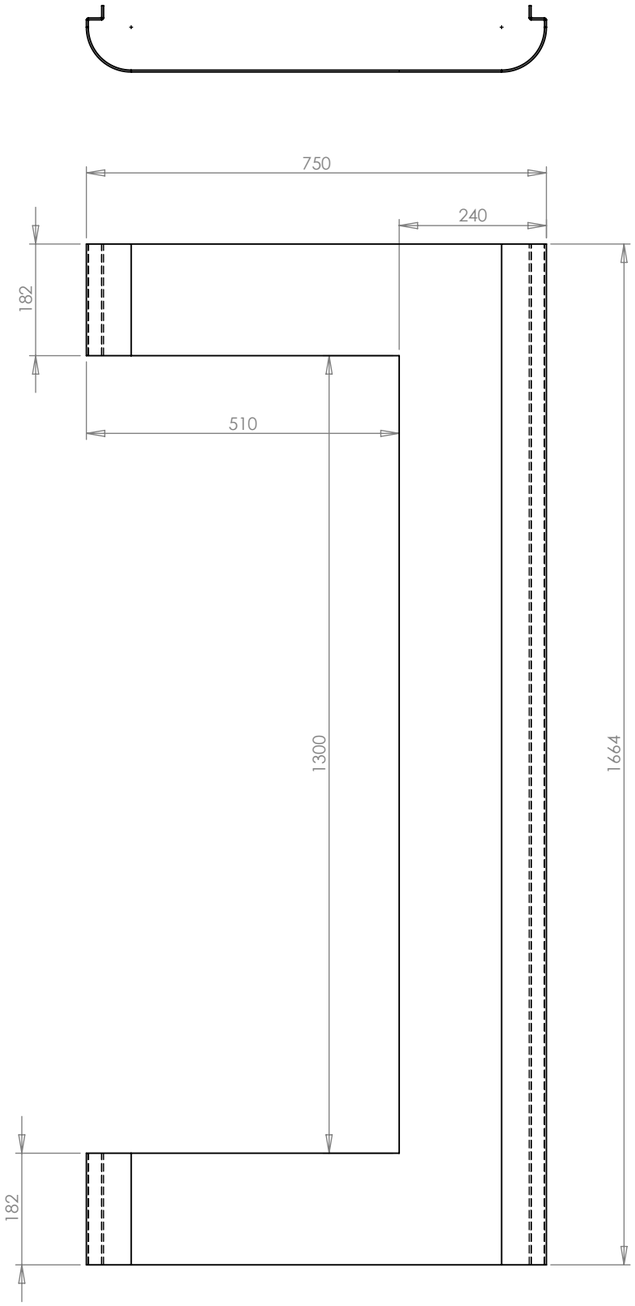

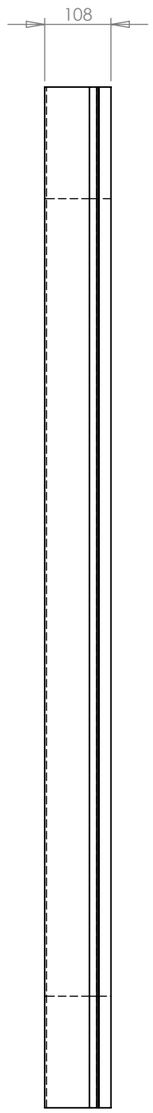

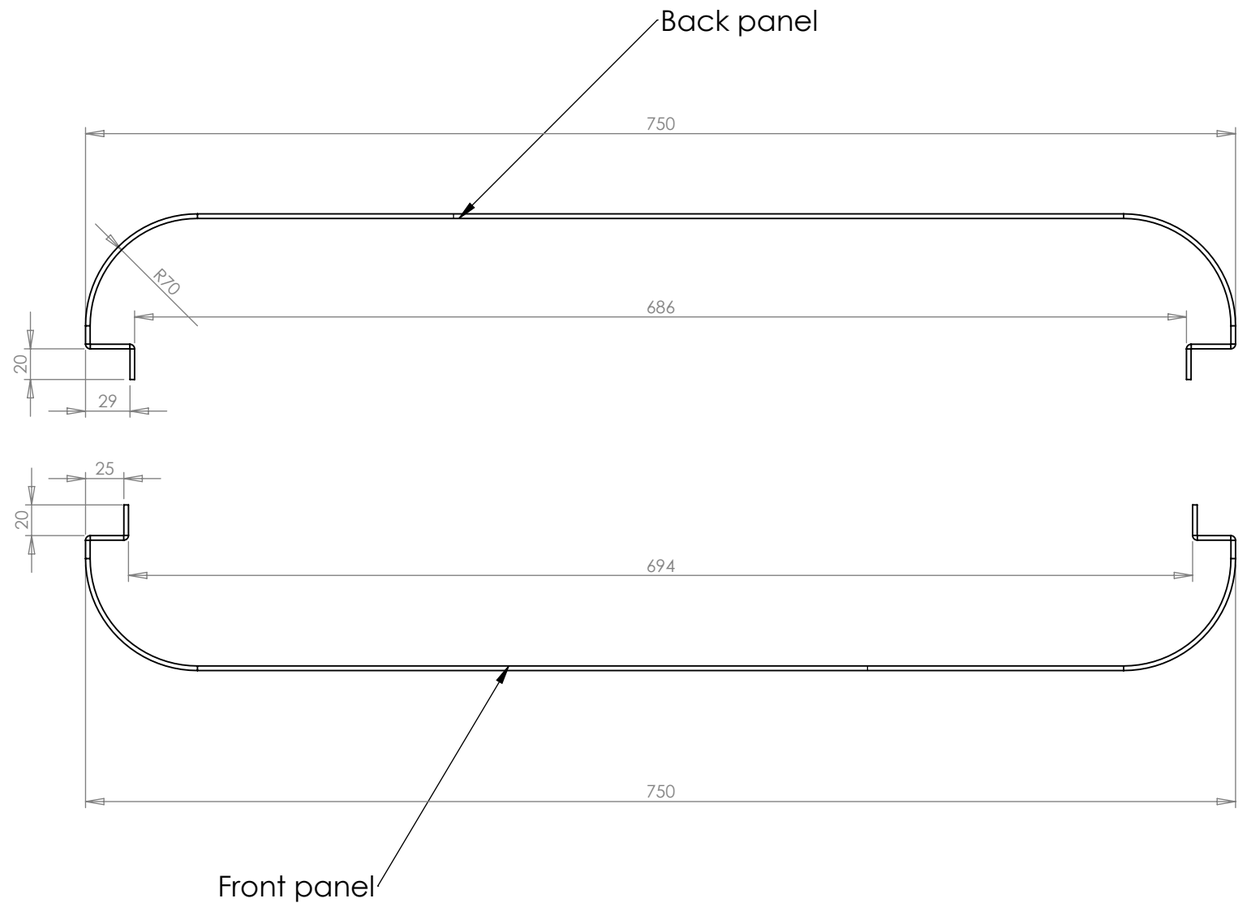

UNLESS OTHERWISE SPECIFIED: DIMENSIONS ARE IN MILLIMETERS UNIT SYSTEM : MMGS TOLERANCES: LINEAR: ANGULAR:		FINISH:				DEBUR AND BREAK SHARP EDGES	DO NOT SCALE DRAWING / REVISION
	NAME	SIGNATURE	DATE				TITLE: Panel double
DRAWN	M.Bullough		07/12/2005				
CHK'D							
APPV'D							
MFG							email: matthewbullough@butterfieldsigns.co.uk Web: www.butterfieldsigns.co.uk
Q.A				MATERIAL:			DWG NO. Tripple Unit - Single / A3
				WEIGHT:			SCALE:1:10 / SHEET 6 OF 10

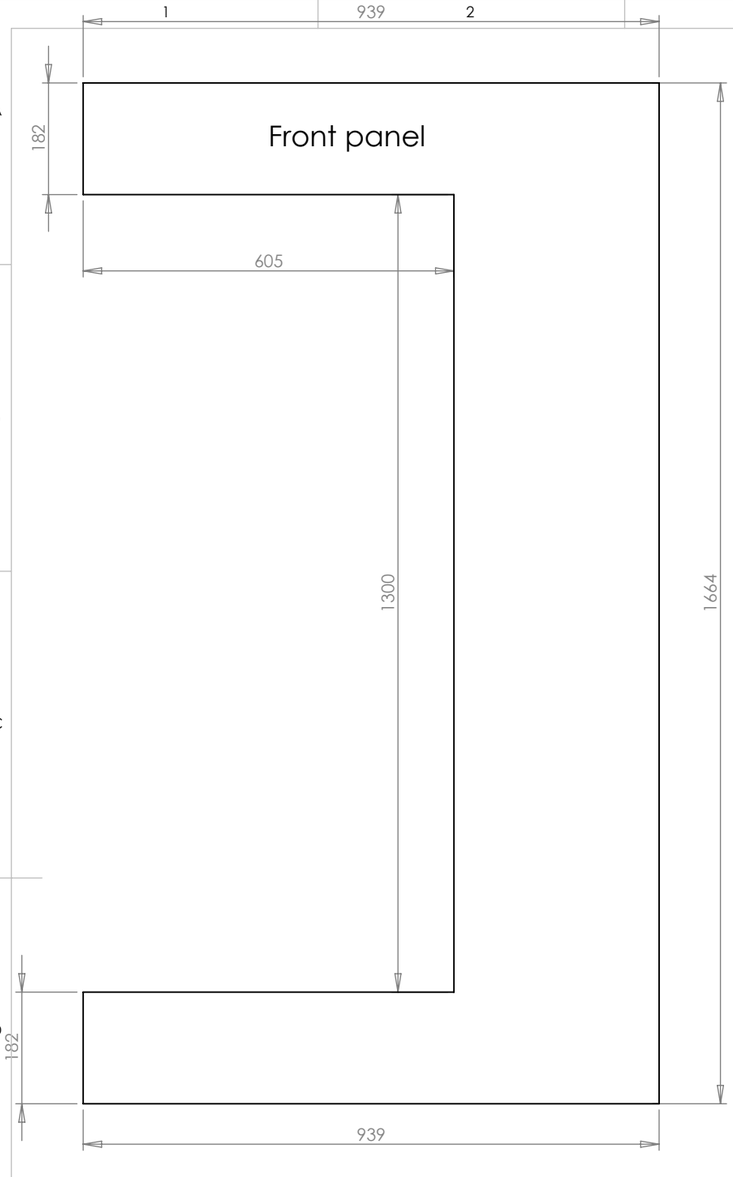

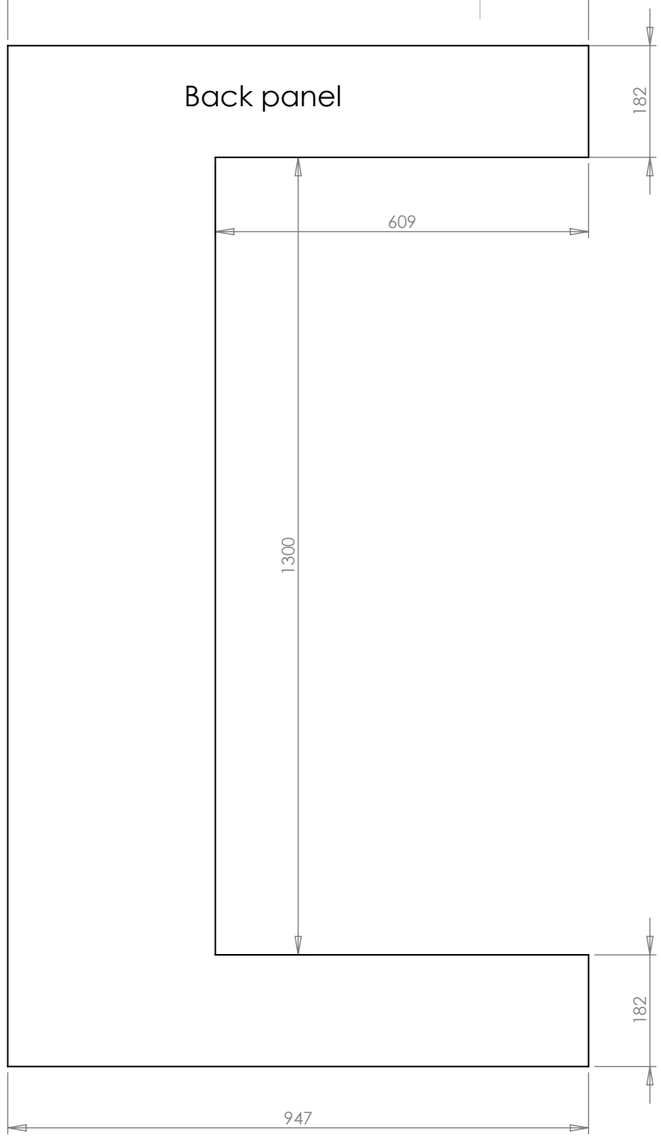

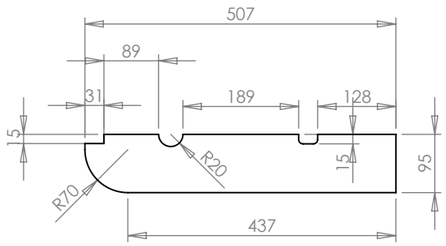

x 2

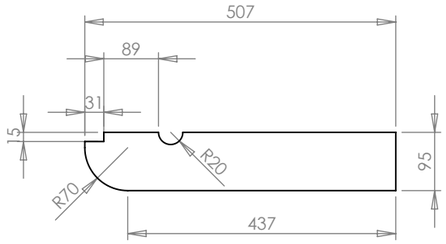

x 2

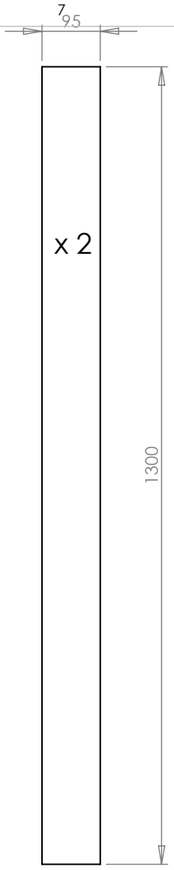

x 2

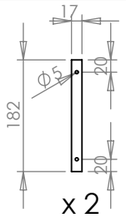

x 2

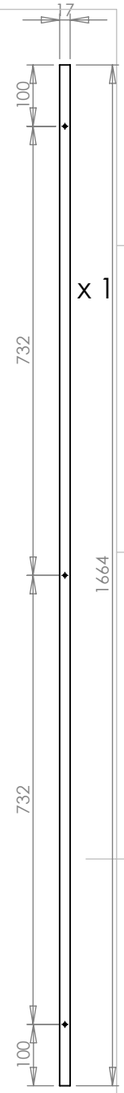

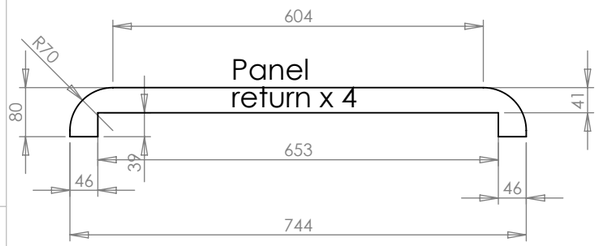

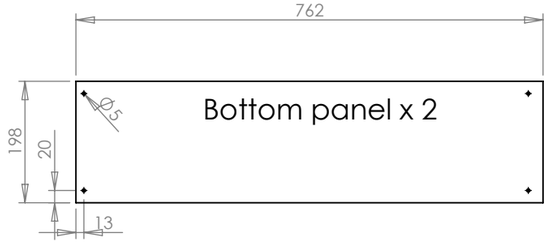

UNLESS OTHERWISE SPECIFIED: DIMENSIONS ARE IN MILLIMETERS UNIT SYSTEM : MMGS TOLERANCES: LINEAR: ANGULAR:		FINISH:				DEBUR AND BREAK SHARP EDGES	DO NOT SCALE DRAWING / REVISION
	NAME	SIGNATURE	DATE				TITLE: Panel double
DRAWN	M.Bullough		07/12/2005				
CHK'D							
APPV'D							
MFG							email: matthewbullough@butterfieldsigns.co.uk Web: www.butterfieldsigns.co.uk
Q.A				MATERIAL:			DWG NO. Tripple Unit - Single / A3
				WEIGHT:			SCALE:1:10 / SHEET 7 OF 10

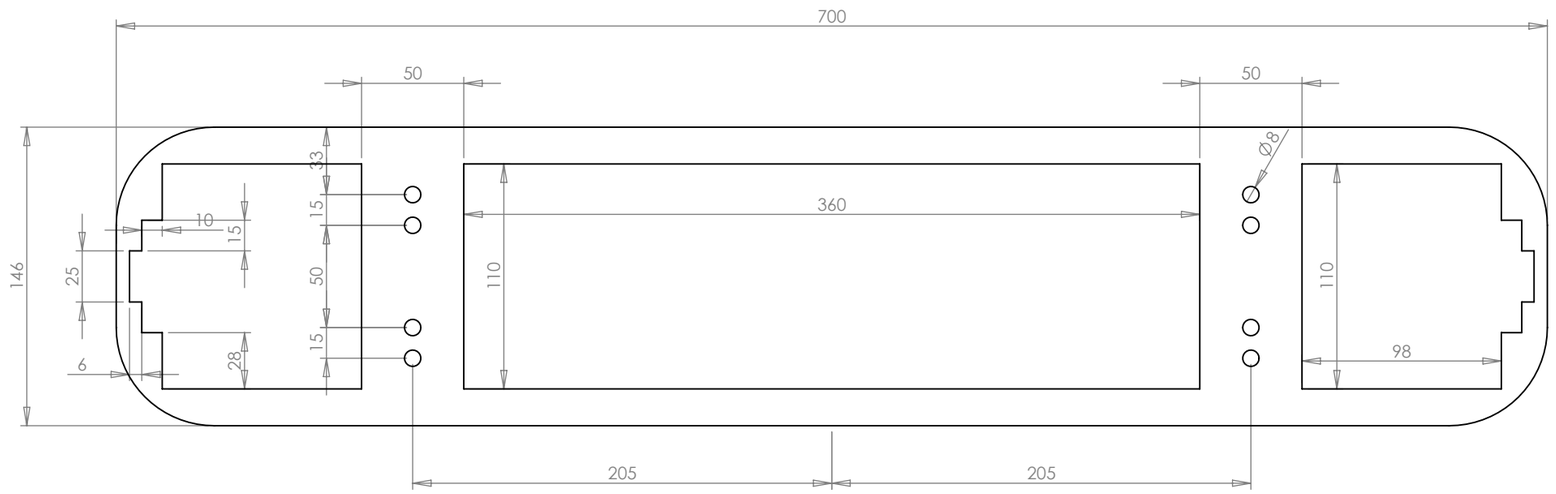

x2

UNLESS OTHERWISE SPECIFIED: DIMENSIONS ARE IN MILLIMETERS UNIT SYSTEM : MMGS TOLERANCES: LINEAR: ANGULAR:		FINISH:				DEBUR AND BREAK SHARP EDGES	DO NOT SCALE DRAWING / REVISION
	NAME	SIGNATURE	DATE				TITLE: 10mm Plate
DRAWN	M.Bullough		16/11/2005				
CHK'D							
APPV'D							
MFG							email: matthewbullough@butterfieldsigns.co.uk Web: www.butterfieldsigns.co.uk
Q.A				MATERIAL:			DWG NO. Tripple Unit - Single / A3
				WEIGHT:			SCALE:1:3 / SHEET 8 OF 10





UNLESS OTHERWISE SPECIFIED: DIMENSIONS ARE IN MILLIMETERS UNIT SYSTEM : MMGS TOLERANCES: LINEAR: ANGULAR:		FINISH:			DEBUR AND BREAK SHARP EDGES	DO NOT SCALE DRAWING	REVISION
						TITLE: 8mm Plate	
	NAME	SIGNATURE	DATE				
DRAWN	M.Bullough		16/11/2005				
CHK'D							
APPV'D							
MFG							
Q.A				MATERIAL:		DWG NO. Tripple Unit - Single	A3
				WEIGHT:		SCALE:1:3	SHEET 9 OF 10

email: matthewbullough@butterfieldsigns.co.uk Web: www.butterfieldsigns.co.uk

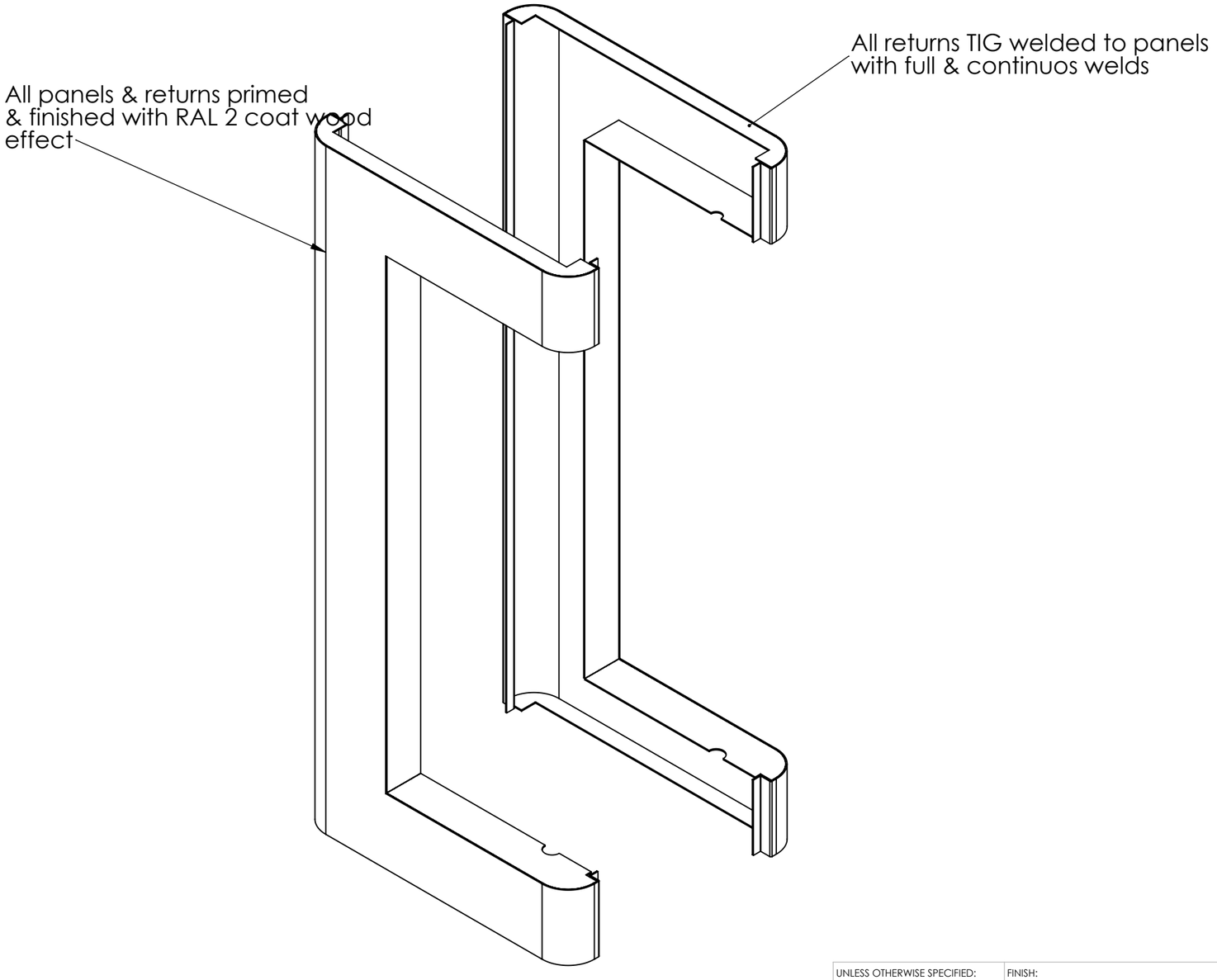

UNLESS OTHERWISE SPECIFIED: DIMENSIONS ARE IN MILLIMETERS UNIT SYSTEM : MMGS TOLERANCES: LINEAR: ANGULAR:		FINISH:				DEBUR AND BREAK SHARP EDGES	DO NOT SCALE DRAWING / REVISION
	NAME	SIGNATURE	DATE				TITLE: Panel Assembly Double
DRAWN	M.Bullough		31/08/2006				
CHK'D							
APPV'D							
MFG							
Q.A				MATERIAL:			DWG NO. Tripple Unit - Single / A3
				WEIGHT:			SCALE:1:10 / SHEET 10 OF 10

email: matthewbullough@butterfieldsigns.co.uk Web: www.butterfieldsigns.co.uk