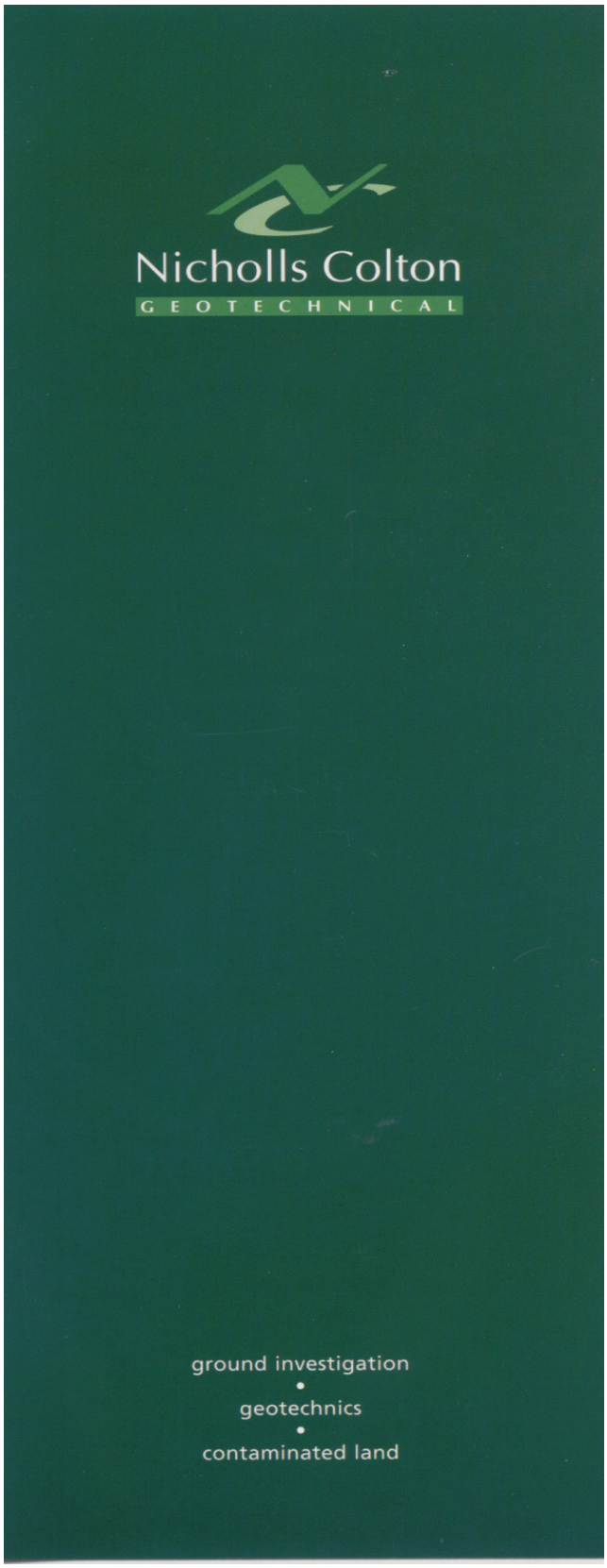

Preliminary Contamination Assessment

for

Mr G. Wilford

on

Land Adjoining Stokes Industrial Park, Merrylees Industrial Estate, Desford, Leicester.

G11037 June 2011

Status: Final

CONTENTS

SECTION	TITLE	PAGE NO.
FACTUAL INFORMATION		
1.	Introduction	1
2.	Site Description	1
3.	Desk Study – Site History	2
4.	Desk Study – Environmental Review	4
5.	Site Work	6
6.	Laboratory Testing	7
7.	General Geology and Revealed Strata	8
8.	Groundwater	8
ASSESSMENT & RECOMMENDATIONS		
9.	Proposed Works	9
10.	Soil Profile	9
11.	Geotechnical Assessment	10
12.	Conceptual Model	10
13.	Soil Contamination	13
14.	Soil Leaching	16
15.	Ground and Surface Water	17
16.	Gas Assessment	19

APPENDICES

A. Site Photographs

B. Historical Ordnance Survey Plans

C. Environmental Report

D. Cable Percussion Borehole Logs

E. Trial Pit Logs

F. Laboratory Test Results – Contamination

G. Groundwater Monitoring Results

DRAWINGS

G11037/01 Site Location Plan

G11037/02 Exploratory Hole Location Plan

PRELIMINARY CONTAMINATION ASSESSMENT FOR LAND ADJOINING STOKES INDUSTRIAL PARK, MERRYLEES INDUSTRIAL ESTATE, DESFORD, LEICESTER.

1. Introduction

1.1 This report has been prepared on instructions given by Mr G. Wilford, 22 Hazel Street, Desford, Leicester.

1.2 It is understood that Mr G. Wilford has recently purchased the site. The proposal is to erect a portal frame unit at the site and it is understood that the industrial unit will be used as a warehouse for the storage of parts for demolition plant and crushers.

1.3 The purpose of this investigation was to obtain and summarise desk study information regarding the history and environmental status of the site. As a part of this work, a preliminary assessment of soil, leachate and groundwater contamination has been carried out.

1.4 The site is located on Merrylees Industrial Estate, Desford, Leicester (approximate National Grid Reference 446700, 306330) as shown on the appended site location plan (Nicholls Colton Geotechnical drawing No G11037/01).

1.5 This investigation has been undertaken on the specific instructions of Mr G. Wilford and no reliance should be made by third parties as to its adequacy or completeness in relation to future development requirements of the area under consideration. Similarly Nicholls Colton Geotechnical and Nicholls Colton and Partners Ltd will accept no liability in relation to the use of data contained in this report by third parties.

2. Site Description

2.1 A site walkover was undertaken by a Geo-Environmental Engineer in March 2011. The significant observations are summarised below:

- At the time of the site walkover survey general site clearance works were being undertaken. A small dumper truck, a tracked excavator and a tractor were present on the site. A raised brick manhole chamber had recently been built within the central area of the site and a small soil bund was present along part of the sites eastern boundary.

- Two old drums were present on the site and appeared to have been recently used for the burning of general site debris. A small single storey office building and three storage cabins were located within the northern area of the site.

- A new steel palisade fence appeared to have been recently erected around 3 sides of the site (along the northern, southern and western site boundaries). A row of trees formed the eastern site boundary. A railway line is located to the immediate east of the site – running in approximately a north-west to south-east direction.

- A number of photographs taken at the time of the site walkover are included in this report as Appendix A.

3. Desk Study – *Site History*

3.1 As part of the desk study reference to old Ordnance Survey plans has been undertaken to assess the previous site usage. Copies of the plans have been included as Appendix B of this report.

3.2 *Earliest Available Publications Dated Late 1800's*

3.2.1 The earliest available editions, dating from the late 1800's (1885 and 1886) indicate the site and surrounding land to comprise undeveloped agricultural land. A railway line, annotated the Leicester and Burton Branch on subsequent publications, is shown to the immediate east of the site. The railway line runs in approximately a north-west to south-east direction.

3.2.2 An unnamed stream/ river is shown approximately 175m to the east of the site; the stream/ river is indicated as flowing in a north-west to south-east direction. A further unnamed stream is shown approximately 550m to the east of the site and is shown to join the first stream approximately 500m to the south of the site.

3.2.3 A sand pit and two old gravel pits are shown on the earliest available publications approximately 400m to the south-west and 800m and 1.1km to the west of the site respectively. Merrylees Road is shown to have been developed to the south of the site.

3.3 *Publications Dated 1903 and 1903-1904*

3.3.1 The publications dated 1903 and 1903-1904 show a colliery and series of shafts to have been developed approximately 800m to the north-west of the site. A railway line is shown to branch off the main railway line to the colliery and to extend along the eastern area of the site.

3.3.2 The eastern area of the site is shown on these publications to be occupied by the railway track that extends to the colliery. The western area of the site remains undeveloped agricultural land.

3.4 *Publications Dated 1915 and 1919*

3.4.1 The publications dated 1915 and 1919 show further expansion of the railway tracks within the eastern area of the site, and further expansion of the railway tracks on the land to the immediate north and south of the site. The western area of the site remains undeveloped.

3.4.2 The colliery to the north-west of the site is annotated Desford Colliery and has been further developed with additional buildings, a reservoir and several additional railway lines shown to have been constructed.

3.4.3 An area of marshland is shown to the south of the site, adjacent to the railway line.

3.5 *Publications Dated 1930 and 1930-1931*

3.5.1 Three excavations and a brick works are shown to have been developed within the area of Desford Colliery on the publications dated 1930 and 1930-1931. There are no significant changes on the site and no further significant changes to the surrounding land on these publications.

3.6 *Publications Dated 1955 and 1959*

3.6.1 The publications dated 1955 and 1959 show significant development of the railway to have taken place within the area of the site. The whole site is shown on these publications to be occupied by the railway lines and sidings.

3.6.2 A colliery is shown on these publications approximately 400m to the south of the site, adjacent to Merrylees Road. A series of additional railway lines and a tramway are shown to have been developed in the location of the colliery.

3.6.3 Desford Colliery appears to have been further developed. A large building is shown within the central area of the colliery, the excavations and brick works are shown to have been enlarged and two conveyors are shown to extend into the excavations.

3.6.4 A large 'works', identified on subsequent publications as a sewage works, has been developed approximately 100m to the north of the site.

3.7 *Publications Dated 1966-1968 and 1959-1989*

3.7.1 The colliery identified to the immediate south of the site on the previous publications is annotated 'Mine' on these publications. A large coal yard is shown to the immediate south of the site. No changes to the site are shown on these publications.

3.7.2 A large refuse/ slag heap is shown within the area of Desford Colliery to the north-west of the site.

3.8 *Publication dated 1982-1985*

3.8.1 The land to the south of the site which was annotated 'Mine' on the previous publications is now annotated 'Works' on this publication.

3.8.2 The refuse / slag heaps shown within the area of Desford Colliery are now annotated 'tips (disused)'. The tips are shown to cover larger areas of the land surrounding the colliery and are located approximately 400m from the site at the closest point. A large clay pit is now shown to the south of the brick works, approximately 500m to the north-west of the site.

3.8.3 No changes to the site are shown on these publications.

3.9 *Publications Dated 1995 and 2000*

3.9.1 The site and surrounding land are shown to be occupied by Merry Lees Industrial Estate on the publications dated 1995 and 2000. A building is shown within the north-western corner of the site; the building appears to be the same as the one that occupied the site at the time of the fieldwork. A single railway line forms the eastern boundary of the site.

3.9.2 Desford Colliery, previously located to the north-west of the site, is no longer shown. The land surrounding the colliery appears to have been restored and a number of ponds/ lakes are shown to now occupy this area. The clay pit is still shown to the north-west of the site.

3.10 *Publications Dated 2006 and 2010*

3.10.1 There are no significant changes on the site and no significant changes to the surrounding land on the publications dated 2006 and 2010.

4. Desk Study - *Environmental Review*

4.1 As a further part of the desk study an environmental database compiled by The Landmark Group® has been consulted. The data has been sourced from various organisations including the Environment Agency (EA), Coal Authority, British Geological Survey (BGS) and Local Authorities and relates to information that may affect the site and its environs. A copy of the report is included as Appendix C. The notable findings may be summarised as follows:

4.2 *Agency and Hydrological*

4.2.1 There are no contaminated land register entries, enforcement and prohibition notices, integrated pollution control licenses or registered radioactive substances recorded within 500m of the site.

4.2.2 The EA has two records of discharge consents within 0 to 250m of the site. The consents relate to Severn Trent Water Limited's obligations with regard to sewage discharges into Rothley Brook. Two of the discharge consents are identified as being located approximately 131m to the north-east of the site and relate to sewage discharges from Thornton and Bagworth Station, Off Merrylees Road, Thornton, Coaville. The report identifies a further four discharge consents to be located within 251 to 500m of the site.

4.2.3 The report identifies one Integrated Pollution Prevention and Control consent to be located within 251 to 500m of the site. The consent is identified as relating to Intensive Farming (greater than 40,000 poultry) activities at Henwood Farm, Desford Road, Kirby Muxloe and is located approximately 434m to the south-east of the site.

4.2.4 The report indicates that the nearest surface water feature is located approximately 98m to the north-east of the site. The historical plans show an unnamed stream/ river at a comparable distance from the site.

4.2.5 River quality data held by the EA for watercourses in close proximity to the site include a sampling point in Rothley Brook. The report identifies a River Quality Sampling Point in Rothley Brook to have recorded a GQA Grade of B (good) on sampling visit made in 2000. The report records the sampling point as the site. It is unclear why the site is recorded as being the sampling point - the closet surface water feature (an unnamed stream/ river) is located approximately 98m to the north-east of the site.

4.2.6 The EA has four records of Pollution Incidents to Controlled Waters within 251 to 500m of the site. The closest of these is located approximately 388 metres to the south-east of the site and concerned the spillage of a miscellaneous pollutant into Rothley Brook in May 1998. The incident has been classified as a Category 3 – Minor Incident. The remaining pollution incidents recorded within 251 to 500m of the site are noted to be located 417m to the south-east, 464m to the south-east and 466m to the north-east of the site and have all been classified as Category 3 – Minor Incidents.

4.2.7 No licensed groundwater abstractions are recorded within 500m of the site. The EA has one record of a licensed groundwater abstraction within 501 to 1000m of the site. The license is recorded as being located at Busky Farm and the operator is identified as Mr C. H. Bancroft. The abstraction is recorded as being located approximately 825m to the north-east of the site and is recorded as being for general farming and domestic purposes.

4.2.8 The underlying bedrock is recorded as a Secondary Aquifer - B. Superficial deposits present at the site are classified as a Secondary Aquifer – A.

4.2.9 The site is not identified as being located within a Source Protection Zone (SPZ).

4.2.10 The report indicates that the site is located approximately 111m from an area potentially at extreme risk of flooding from a river without defences.

4.3 *Waste*

4.3.1 No BGS recorded landfill sites, historical landfill sites, local authority recorded landfill sites or registered landfill sites are identified within 250m of the site.

4.3.2 The EA have one record of a historical landfill site within 251 to 500m of the site. The landfill site is identified as being located approximately 388m to the north-west of the site on Heath Road, Coaville. The waste materials accepted by the landfill site are recorded as including inert and industrial wastes and the first input date is recorded as June 1992 – a last input date is not provided.

4.3.3 The report identifies one local authority recorded landfill sites to be located within 251 to 500m of the site. No further information is supplied on this landfill site.

4.3.4 The EA has one record of a licensed waste management facility (landfill boundary) to be located within 251 to 500m of the site. The facility is identified as Desford Brickworks and is located approximately 387m to the north-west the site on Heath Road. The license holder for the site is Hanson Brick Ltd and the site is categorised as an industrial waste landfill. The license for the site was issued in May 1991 and the license status is recorded as inactive.

4.3.5 The EA also has one record of a licensed waste management facility (locations) to be located within 251 to 500m of the site. The facility is also identified as Desford Brickworks and is located approximately 427m to the north-west the site on Heath Road. The license holder for the site is Hanson Brick Ltd and the site is categorised as an industrial waste landfill. The license for the site is recorded as being surrendered in July 2010.

4.4 *Hazardous Substances*

4.4.1 The EA has one record of a Control of a Major Accident Hazard (COMAH) site within 251 to 500m of the site. Flogas Uk Ltd are recorded as having a site approximately 341m to the south of the site.

4.4.2 The report identifies one Planning Hazardous Substance Consent to be located within 0 to 250m of the site. Flogas Uk Ltd are noted to have made an application for a site approximately 125m to the south of the site at Stokes Industrial Park, Merrylees Road. The hazardous substance is identified as liquefied extremely flammable gas and natural gas and the decision is recorded as deemed / granted, dated July 2002.

4.5 *Geological*

4.5.1 The underlying solid geology is expected to comprise Triassic Mudstones (and are noted to include the Mercia Mustone, Dolomitic Conglomerate and Rhaetic Formations).

4.5.2 One BGS Recorded Mineral Site is recorded within 251 to 500m of the site. The mineral site is identified as Merrylees Drift and is located approximately 349m to the south of the site at Merrylees, Bagworth. Underground mining methods were adopted at the site and mining operations are recorded as 'ceased'. The commodity is noted to have been coal (deep).

4.5.3 The site lies in an area which may be affected by coal mining activity according to the BGS. The report recommends that a coal mining report is obtained from the Coal Authority.

4.5.4 As advised by the BGS, ground stability hazards such as landslide, swelling /shrinking clay and running sand are considered to represent either a very low risk or a low risk at the site. Compressible ground stability hazards are considered to represent no hazard, a very low risk and a moderate risk at the site.

4.5.5 The site lies in an area where less than 1% of homes are above the Action Level with respect to radon according to the National Radiological Protection Board. The British Geological Survey (BGS) state that no radon protection measures are necessary in the construction of new buildings or extensions at the site. It is recommended that the Local Building Control Department are contacted in order to confirm their requirements with respect to radon.

4.6 *Industrial Land Use*

4.6.1 A study of nearby trades which may potentially affect the site identifies six to be located within 0 to 250m of the site. The trades are noted to include a gas suppliers (105m from the site), a gas company (105m from the site), a power transmission equipment works (135m from the site), a packaging and wrapping equipment suppliers (183m from the site), a plastic vacuum forming works (205m from the site) and a commercial vehicle dealers (250m from the site).

4.6.2 No fuel stations are recorded within 1000m of the site.

4.7 *Sensitive Land Use*

4.7.1 The site is identified as being located within a nitrate vulnerable zone.

5. Site Work

5.1 One 150mm diameter cable percussive borehole (BH 1) was put down by light cable percussion methods to a depth of 10.00m below existing ground level.

5.2 Three trial pits (TP 1 to TP 3 inclusive) were put down by mechanical excavator to depths of between 1.50m (TP 3) and 2.00m (TP 1 and TP 2) below existing ground level to allow bulk examination of the soils.

5.3 The cable percussion borehole log and trial pit logs are included in this report as Appendices D and E respectively.

5.4 The positions of the cable percussion borehole and trial pits are shown on the appended exploratory hole location plan (Nicholls Colton Geotechnical drawing no. G11037/02).

5.5 Fragmentary disturbed samples were recovered from all materials revealed within the exploratory holes. Geo-environmental samples were obtained specifically for contamination testing.

5.6 The samples were taken to Nicholls Colton Analytical's laboratory for further examination and testing.

5.7 A perforated monitoring standpipe was installed within the cable percussion borehole (BH 1) to enable groundwater monitoring to be undertaken. The details of these standpipe are included on the appended cable percussion borehole log (Appendix D).

5.8 Groundwater monitoring has been carried out on two occasions. The groundwater monitoring results are appended to this report as Appendix G.

5.9 The fieldwork was carried out on 28th February and 11th March 2011.

5.10 This investigation has been carried out in general accordance with BS 5930: 1999.

6. Laboratory Testing

6.1 The laboratory testing schedules were prepared by Nicholls Colton Geotechnical.

6.2 Selected soil samples have been tested for the presence of contaminants as listed below. This MCERTS accredited testing was predominantly undertaken at Nicholls Colton Analytical's (NCA) UKAS accredited laboratory (UKAS No. 0320).

(all values 'total' unless otherwise stated)

- Arsenic
- Cadmium
- Chromium
- Copper
- Lead
- Mercury
- Nickel
- Polyaromatic Hydrocarbons (speciated)
- pH value
- Phenols
- Zinc
- Total Petroleum Hydrocarbons
- Fractionated Aliphatic / Aromatic Hydrocarbon Suite
- Semi Volatile Organic Compounds (SVOC Suite)
- Asbestos (presence of)
- Polychlorinated Biphenols (PCB's)

6.3 Selected samples have also been tested for a leachate suite as outlined below:

(all values 'soluble' unless otherwise stated)

- Arsenic
- Cadmium
- Chromium
- Copper
- Lead
- pH Value
- Mercury
- Nickel
- Zinc
- Polyaromatic Hydrocarbons (speciated)
- Phenols
- Fractionated Aliphatic / Aromatic Hydrocarbon Suite

6.4 In addition, concentrations of the following contaminants were determined from a groundwater sample obtained from the site:

- Arsenic
- Cadmium
- Chromium
- Mercury
- Nickel
- Zinc

- Copper
- Lead
- pH Value
- Polyaromatic Hydrocarbons (speciated)
- Phenols
- Fractionated Aliphatic / Aromatic Hydrocarbon Suite

6.5 No geotechnical laboratory testing has been undertaken as part of this investigation.

6.6 The soil testing outlined above has been carried out during the period 29th March to 13th April 2011.

6.7 The contamination test results are included as Appendix F.

7. General Geology and Revealed Strata

7.1 Geological sources (including BGS sheet 155, Coalville) indicate the site to lie in an area where Alluvial Deposits of Recent Age overlie the Mercia Mudstone strata of Triassic age.

7.2 The Geological Plans indicate made ground materials to be present across the site.

7.3 The exploratory holes revealed a general downward strata succession of:

MADE GROUND	-	roadstone or topsoil overlying clays, sands, gravels, brick, ash, clinker and siltstone intermixed with occasional volumes of polythene, slate and organic material
ALLUVIAL DEPOSITS	-	red brown, grey green, orange and brown slightly organic sandy gravelly clays
	-	orange brown and grey clayey sands and gravels
MERCIA MUDSTONE GROUP	-	red brown and grey green clays with lithorelicts and bands of mudstone and siltstone
	-	red brown and pale grey green mudstones

8. Groundwater

8.1 Slight groundwater seepages were encountered from 2.50 to 2.80m and from 4.50 to 5.30m within cable percussion borehole 1 during the drilling operations. The trial pits remained dry during excavation.

8.2 As outlined in section 5.7, a groundwater monitoring standpipe was installed within the cable percussion borehole (BH 1). The groundwater levels within the cable percussion boreholes have been monitored on two occasions. The borehole was recorded as dry on the first monitoring visit and a water level of 2.73m below existing ground level was recorded on the second monitoring visit. The results of the monitoring are appended (Appendix G).

8.3 Full details of the groundwater observations are included on the exploratory hole logs in appendices E and F.

8.4 No long term monitoring of groundwater levels has been undertaken as part of this investigation. It should be noted that groundwater levels may differ at times from those reported due to seasonal variations or other effects.

Assessment and Recommendations

9. Proposed Works

9.1 It is understood that Mr G. Wilford has recently purchased the site. The proposal is to erect a portal frame unit at the site and it is understood that the industrial unit will be used as a warehouse for the storage of parts for demolition plant and crushers.

9.2 The purpose of this investigation was to obtain and summarise desk study information regarding the history and environmental status of the site. As a part of this work, a preliminary assessment of soil, leachate and groundwater contamination has been carried out.

10. Soil Profile

10.1 *Made Ground*

10.1.1 Made ground materials have been revealed in all of the exploratory holes put down at the site (cable percussion borehole BH 1 and trial pits TP 1, TP 2 and TP 3), to depths in the range 0.90m (BH 1) to 1.50m (TP 2) below existing ground level.

10.1.2 The made ground materials have been noted to generally comprise a surface horizon of topsoil or hardcore overlying clays, sands, gravels, brick, ash, clinker and siltstone intermixed with occasional volumes of polythene, slate and organic material.

10.1.3 The made ground materials encountered at the site are considered not putrescible/ biodegradable. It should be noted that only occasional volumes of organic material have been encountered within the made ground materials.

10.1.4 No visual or olfactory evidence of any contamination was noted within the made ground materials.

10.2 *Alluvial Deposits*

10.2.1 Underlying the made ground materials in all of the exploratory holes put down at the site, Alluvial Deposits have been encountered. These deposits predominantly comprise red brown, grey green, orange and brown slightly organic sandy gravelly clays. Occasional horizons of orange brown and grey clayey sands and gravels have also been encountered within the exploratory holes.

10.2.2 The Alluvial deposits have been encountered at depths as shallow as 0.90m (BH 1) and a maximum recorded depth of 4.50m (BH 1) below existing ground level has been achieved. These deposits have been fully penetrated in only the cable percussion borehole.

10.2.3 The cohesive Alluvial deposits have been assessed to be of soft and firm to stiff consistency.

10.2.4 No visual or olfactory evidence of any contamination was noted within the natural Alluvial deposits.

10.2.5 It should be noted that no geotechnical assessment or testing has been undertaken as part of this contamination assessment.

10.3 *Mercia Mudstone*

10.3.1 Underlying the made ground materials, and the Alluvial deposits in the cable percussion borehole, strata considered to be of the Mercia Mudstone Formation were encountered. These Triassic deposits comprise red brown and grey green clays with lithorelicts and bands of mudstone and siltstone. The cohesive soils have been noted to grade into red brown and pale grey mudstones with depth.

10.3.2 The Mercia Mudstone deposits have been encountered from a depth of 4.50m and a maximum depth of 10.00m has been achieved. These deposits have not been fully penetrated by any of the exploratory holes put down at the site.

10.3.3 The cohesive deposits of the Mercia Mudstone are considered to be of stiff to very stiff consistency.

10.3.4 The cohesive soils have been noted to grade into mudstones in the cable percussion borehole from a depth of approximately 8.50m. Thin bands of mudstones and siltstones have also been encountered within the cohesive soils from 6.50 to 8.50m. The mudstones/ siltstones are assessed to be very weak to weak (in terms of rock strength). It should be noted that the rock assessments are based upon visual inspection of the recovered rock samples only. No laboratory rock strength testing has been undertaken as part of this investigation. Such testing would involve the recovery of undisturbed rock cores samples and such work is outside the scope of this report.

10.3.5 No visual or olfactory evidence of any contamination was noted within the natural Mercia Mudstone deposits.

11. Geotechnical Assessment

11.1 No geotechnical appraisal has been undertaken as part of this preliminary contamination assessment.

11.2 It should however be noted that the desk study data (see sections 3 and 4) has indicated that the site lies in an area which may be affected by coal mining activity according to the BGS. It is recommended that a coal mining report is obtained from the Coal Authority in order to further assess the presence of any shallow coal seams or mine entries beneath the site.

12. Conceptual Model

12.1 The historical information obtained as part of the desk study investigation indicates the site to have been occupied as agricultural land until the early 1900's. The publications dated 1903 show railway sidings to occupy the site. The site is shown to have been occupied by railway land and railway sidings until Merrylees Industrial Estate was developed in the late 1900's. The historical plans indicate colliey's to have previously been located approximately 600m to the north-west of the site and approximately 400m to the south of the site.

12.2 The environmental data indicates that the site lies on a geological formation classified as a Secondary Aquifer - B. Superficial deposits present at the site are also classified as a Secondary Aquifer – A. No groundwater abstraction licenses are recorded within 500m of the site. The closest water abstraction license is recorded as being located approximately 825m to the north-east of the site and the license is recorded as being for general farming and domestic purposes. The report indicates that the nearest surface water feature (an unnamed stream/ river) is located approximately 98m to the north-east of the site. The site is not identified as being located within a Source Protection Zone (SPZ). The site is not located within an area potentially at risk of flooding from a river without defences.

12.3 No landfill sites are recorded within 250m of the site.

12.4 A *conceptual model* has been produced for the site and its environs in order to identify potential contaminants, pathways and receptors, on the basis of the desk study information included in this report. In order to undertake the conceptual model, the *source-pathway-receptor* linkage has been considered and the assessment is summarised, as follows:

12.5 *Source*

12.5.1 The site has previously been occupied by railway sidings. Potential sources of contamination at the site are therefore considered to be associated with the previous railway activities carried out at the site. The historical plans show two colliery's to have been previously located within close proximity of the site. No additional significant off-site sources of contamination have been identified within the vicinity of the site which may have potentially adversely affected the soils or groundwater underlying the site itself.

12.5.2 Consideration of the guidance provided in the Department for Environment, Food and Rural Affairs (DEFRA) and Environment Agency document 'R & D Publication CLR8: Potential Contaminants for the Assessment of Land', Tables 2.3 and 2.4 has been adopted. CLR8 suggests a series of potential contaminants which may be expected to be present within the soils and/or groundwater underlying a site. The contaminants are dependent upon the primary land usage. The following land usages and associated potential contaminants are considered relevant to this particular site:

- *Industrial Profile*
  - Agricultural land #
  - Railway Land

  # - It should be noted that this land use is not included as specific industry within CLR8 and therefore a screening suite for commonly occurring contaminants is suggested.

- Contaminants

  Metals, Semi-metals & Non-metals: Arsenic, Cadmium, Chromium, Copper, Lead, Mercury, Nickel and Zinc

  Others: Asbestos and pH value

  Organic Chemicals: Phenol , Polyaromatic Hydrocarbons, Polychlorinated Biphenols (PCB's)

Additional Potential Contaminants: Oil/Fuel Hydrocarbons, Fractionated Aliphatic/ Aromatic Hydrocarbons and Semi Volatile Organic Compounds (SVOC Suite).

12.5.3 Soils at the site might be contaminated with the substances listed above. These are the *source* of contamination that may affect the future development.

12.6 *Pathway*

12.6.1 It is understood that Mr G. Wilford has recently purchased the site. The proposal is to erect a portal frame unit at the site and it is understood that the industrial unit will be used as a warehouse for the storage of parts for demolition plant and crushers.

12.6.2 Current proposals indicate that the site will be covered by either the building or areas of hardstanding. No areas of soft landscaping are proposed for the site.

12.6.3 On this basis, it is considered that the following pathways should be considered as part of any contamination assessment of the site (see additional notes provided below):

- *Human Health*

  Ingestion of soil
  Ingestion of dust within buildings
  Dermal contact with soil
  Dermal contact with dust within buildings
  Outdoor inhalation of fugitive dust
  Indoor inhalation of fugitive dust
  Inhalation of vapours outside
  Inhalation of vapours inside

- *Surface Water/Groundwater*

  Leaching

NB- It should be noted that the proposal for the site is to construct a new portal frame building. The site is to be covered by either the building or areas of hardstanding - no areas of soft landscaping are proposed for the site.

It is therefore considered that there will be no pathways to provide potential routes for the source of contamination to reach the receptors. The above pathways have been included for completeness in order to assist in characterising the level of contamination present.

12.6.4 The *pathways* provide a potential route for the source of contamination to reach the receptor.

12.7 *Receptor*

12.7.1 The following *receptors* will be present on or near the site and will therefore be potentially linked to the identified contaminant sources via the indicated pathways:

- Groundwater
- Watercourses
- Future occupiers
- Construction workers
- Building fabric
- Underground services (water pipes etc.)

12.7.2 The environmental data indicates that the site lies on a geological formation classified as a Secondary Aquifer - B. Superficial deposits present at the site are also classified as a Secondary Aquifer – A. No groundwater abstraction licenses are recorded within 500m of the site. The closest water abstraction license is recorded as being located approximately 825m to the north-east of the site and the license is recorded as being for general farming and domestic purposes. The report indicates that the nearest surface water feature (an unnamed stream/ river) is located approximately 98m to the north-east of the site. The site is not identified as being located within a Source Protection Zone (SPZ). The site is not located within an area potentially at risk of flooding from a river without defences.

13. Soil Contamination

13.1 The historical information obtained as part of the desk study investigation indicates the site to have been occupied as agricultural land until the early 1900's. The publications dated 1903 show railway sidings to occupy the site. The site is shown to have been occupied by railway land and railway sidings until Merrylees Industrial Estate was developed in the late 1900's. The historical plans indicate colliery's to have previously been located approximately 600m to the north-west of the site and approximately 400m to the south of the site.

13.2 The *conceptual model* prepared and included in section 12 identified a series of potential contaminants as a result of the previous site usage. Pathways for these source contaminants to find their way to potential receptors were considered, and the receptors were based on the proposed end usage of the site and its environs.

13.3 Guidance published by the Department of Environment Food and Rural Affairs (DEFRA) and the Environment Agency has been utilised to review the results of the soil contamination analyses. In particular, the Contaminated Land Exposure Assessment (CLEA) Model has been considered.

13.4 DEFRA has published a series of Soil Guideline Value (SGV) reports for a number of contaminants. The current set of SGV's was published by DEFRA during the period March to July 2009. The SGV reports contain the background toxicological and physico-chemical data utilised by DEFRA to calculate the individual SGV's.

13.5 DEFRA have calculated the current SGV's using the CLEA v.1.04 and v.1.06 software (the software was subject to minor changes during 2009).

At present, DEFRA have published SGV's for the following –

- Arsenic
- Cadmium

- Mercury (elemental, organic and methyl)
- Nickel
- Selenium
- Benzene
- Ethylbenzene
- Phenol
- Toluene
- Xylene (o-, m-, and p-).
- Dioxins and dioxin-like PCB's

13.6 Given the relatively small size of the published data supplied by DEFRA, additional authoritative advice has been provided to industry and regulators by Land Quality Management (LQM) and the Chartered Institute of Environmental Health (CIEH). For a large set of contaminants not covered by the SGV's, LQM / CIEH have published Generic Assessment Criteria (GAC's).

13.7 The 2nd Edition LQM / CIEH GAC's were published in July 2009. The GAC's have been calculated using the CLEA v.1.04 software (the CLEA software was the subject of minor up-dates during the latter half of 2009).

13.8 The 2nd Edition of the LQM /CIEH document contains the following GAC's –

- Beryllium
- Boron
- Cadmium (note – this was simultaneously published as an SGV by DEFRA).
- Chromium (III and VI)
- Copper
- Vanadium
- Zinc
- Petroleum Hydrocarbon Fractions (16 Fractions)
- Polyaromatic Hydrocarbons (US EPA 16)
- Chloroalkanes and Alkenes (8 No.)
- Explosives (2 No.)
- Pesticides (5 No.)
- Chlorobenzenes (6 No.)
- Phenol and Chlorophenols (3 no.)
- Other (2 No.)

13.9 Additional GAC's have also been published by the Environmental Industries Commission (EIC) and the Association of Geotechnical Specialists (AGS), under the aegis of CL:AIRE, in January 2010. These GAC include antimony, barium, molybdenum and a large group of hydrocarbons, halogenated organics, phenols, phthalates and other organics.

13.10 Exceedance of a DEFRA SGV implies that an unacceptable human health risk *may* be present, and therefore either further site specific risk assessment is required, or intervention (remedial) works are necessary.

13.11 Similarly, exceedence of an LQM / CIEH (or EIC / AGS) GAC implies that an unacceptable human health risk *may* be present, and therefore either further site specific risk assessment is required, or intervention (remedial) works are necessary.

13.12 SGV's and GAC's are set according to the proposed end use of the land. For the purposes of this report, '*industrial/ commercial'* land use figures have been adopted.

13.13 The concentration of the individual contaminants identified in the conceptual model for this site have been compared to the published SGV's and GAC's, as an initial screen, to determine the degree if any of contamination present.

13.14 Where no SGV or LQM/CIEH (or EIC / AGS) GAC's are available the CLEA v.1.06 software has been utilised to derive generic values in-house by Nicholls Colton Geotechnical (of note this applies to lead).

13.15 A series of soil samples has been collected and analysed for the presence of selected contaminants. The results are included as Appendix F.

13.16 All of the individual contaminant concentrations were recorded at concentrations below the relevant SGV's / GAC's for the industrial end use.

13.17 In addition, four samples were tested for the presence of asbestos. None was detected.

13.18 Hydrocarbon testing has been carried out on five samples of the near surface soils obtained from the site – four samples of the made ground material and one sample of the natural soil.

13.19 It should be noted that no visual or olfactory evidence of hydrocarbon contamination was noted within any of the exploratory holes put down at the site.

13.20 Total hydrocarbon concentrations of 447mg/kg (TP 2 at 0.30m) and 477mg/kg (TP 3 at 0.60m) have been recorded within the samples of the made ground. A hydrocarbon concentration of 52.8 mg/kg (TP 3 at 0.60m) has been recorded within a sample of the natural soil tested from the site. It should be noted that concentrations of TPH in excess of 500 mg/kg are often considered to be elevated and a *potential* threat to human health. The TPH concentrations recorded from the site are therefore not considered to be significant.

13.21 In order to further characterise the hydrocarbon fractions present and to more fully determine the potential threat to human health two fractionated aliphatic/ aromatic hydrocarbon tests have been undertaken on samples of the made ground. The fractionated hydrocarbon test results have been compared to the LQM/CIEH GAC values for the industrial land use figures. All of the individual hydrocarbon fractions were recorded below the appropriate LQM/CIEH GAC validation criteria.

13.22 Three soil samples (two samples of the near surface made ground material and one sample of the underlying natural soil) have also been tested for a semi volatile organic compound suite (SVOC's). The results for these tests were generally all below the detection limit for each of these tests. Where appropriate the results have been compared to the LQM/CIEH GAC values for the commercial land use figures. All of the individual contaminant concentrations were recorded at concentrations below the relevant LQM GAC's for the commercial land end use. On the basis of the above, and given the very low detection limits adopted for the remaining VOC suite tests, this indicates that these potential contaminants are not present at elevated concentrations.

13.23 Three soil samples (two samples of the near surface made ground material and one sample of the underlying natural soil) have also been tested for Polychlorinated Biphenols (PCB's).

13.24 It should be noted that no published data such as Soil Guideline Values (SGV's) for acceptable concentrations of PCB's within soil are available and therefore assessment of the concentrations obtained from the site is not straightforward.

13.25 On the basis of the toxicity of each of the individual compounds present within PCB's, similar assessments undertaken on residential and industrial developments with the potential for PCB contaminated soils have recommended that any result in excess of the detection limit should be considered as being elevated. This is considered to be a stringent approach.

13.26 Total PCB concentrations of <0.28 mg/kg were obtained from each of the three soil samples. In addition, PCB concentrations of <0.04 mg/kg were recorded for each of the individual PCB compounds respectively.

13.27 On the basis of the above, and given the very low detection limits adopted for the PCB tests, this indicates that these potential contaminants are not present at elevated concentrations.

13.28 As noted above, it should be noted that the design proposals indicate that the soils present at the site will be covered by either the new building or areas of hardstanding. It is therefore considered that there will be no pathways to provide potential routes for the source of contamination to reach the receptors. It is understood that no areas of soft landscaping are proposed at the site.

13.29 On the basis of the above testing it is considered that the soils present at the site are suitable for the proposed commercial development of the site and that no remediation will be required.

13.30 Should the design proposals change, notably should any soft landscaped areas be proposed on the site, further assessment would be required.

13.31 Consideration will need to be given to the welfare of groundworkers during the construction phase of the development. Basic hygiene protocols should be implemented (e.g. washing hands prior to consuming food) and the wearing of suitable personal protective equipment (gloves, overalls etc.) is recommended as a minimum.

13.32 Should any new water supply pipes be laid at the site it is recommended that the advice provided within the WRAS (Water Regulations Advisory Scheme) document titled 'The Selection of Materials for Water Supply Pipes to be laid in Contaminated Land' should be followed in order to ensure that appropriate pipe materials are selected.

14. Soil Leaching

14.1 Four leachate tests have been undertaken on selected samples of the near surface made ground materials to determine the degree to which soil contaminants may leach out, and therefore potentially pollute the groundwater and/or nearby watercourses. The results of the leachate test are included in Appendix F.

14.2 The results have been compared to Environment Agency Quality Standards (EQS), in order to assess the degree of contamination. It should be remembered that EQS are set generally at Drinking Water Standards and therefore these thresholds are particularly stringent. In the case of polyaromatic hydrocarbons there is no EQS and the results have been compared directly to the Drinking Water Standards (DWS).

14.3 The results indicate that the following contaminant concentrations exceed the published EQS's or DWS.

Copper

EQS	:	10 µg/l (at the hardness band of 200-250mg/l)
Elevated results	:	2 (of 3) samples elevated
Elevated concentrations	:	22.7 µg/l (TP 2 – 0.30m)
	:	12.0 µg/l (TP 3 – 0.60m)
Remarks	:	Marginal impact potential

14.4 The results indicate that none of the remaining contaminant concentrations exceed that relevant EQS or DWS threshold values.

14.5 The leachate test results indicate that there is a potential for a small degree of leaching of copper at the site. The marginally elevated metal (copper) leachate values are considered to be consistent with the nature of the materials present at the site and the activities that previously occupied the site.

14.6 The conceptual model and desk study information indicates that the site is located over a geological formation classified as a Secondary Aquifer - B. Superficial deposits present at the site are also classified as a Secondary Aquifer – A. No groundwater abstraction licenses are recorded within 500m of the site. The closest water abstraction license is recorded as being located approximately 825m to the north-east of the site and the license is recorded as being for general farming and domestic purposes. The report indicates that the nearest surface water feature (an unnamed stream/ river) is located approximately 98m to the north-east of the site. The site is not identified as being located within a Source Protection Zone (SPZ).

14.8 As detailed in section 12, design proposals indicate that the soils present at the site will be covered by either the new building or areas of hardstanding, draining to a new surface water system. It is understood that no areas of soft landscaping are proposed at the site. The propensity for future infiltration (and hence any potential leaching) will therefore be greatly reduced.

14.9 On the basis of the available leachate data, it is considered that the soils at the site have a very low potential for significantly and adversely impacting upon the groundwater and/or surface water environment. This is consistent with the soil and groundwater laboratory test results – no significantly contaminated soils have been encountered. It is therefore considered that no further action is necessary in respect of leachates.

14.10 The approval of the Environmental Health Officer, who may seek the advice of the Environment Agency, should be sought in respect of the above.

15. Ground and Surface Water Contamination

15.1 As described in section 5, a groundwater sample has been obtained from the borehole put down at the site, and has subsequently been analysed in the laboratory for a range of potential pollutants.

15.2 The groundwater sample was obtained from the cable percussion borehole (BH 1) put down at the site. The sample was obtained following purging three volumes of the borehole water and the results are included in this report as Appendix F.

15.3 The results have been compared to the Environment Agency Quality Standards (EQS), in order to assess the degree of contamination. In the case of a number of the potential contaminants where there is no EQS (ie. polyaromatic hydrocarbons) the results have been compared directly to the Drinking Water Standards (DWS).

15.4 The results indicate that the following contaminant concentrations exceed the published EQS's or DWS:

Arsenic

EQS	:	50 µg/l
Elevated results	:	1 (of 1) samples elevated
Elevated concentration	:	51.7 µg/l (BH 1)
	:	
Remarks	:	Marginal impact potential

Copper

EQS	:	10 µg/l (at the hardness band of 200-250mg/l)
Elevated results	:	1 (of 1) samples elevated
Elevated concentration	:	44.5 µg/l (BH 1)
	:	
Remarks	:	Marginal impact potential

15.5 Generally the results indicate that none of the contaminants are present at concentrations in excess of the appropriate EQS or DWS trigger values. This is considered consistent with the finding that significant leaching of contaminants from the soil is not occurring. It is also considered consistent with the earlier conclusion that the soils at the site are generally not contaminated.

15.6 As noted in section 6, the groundwater sample has also been tested for fractionated aliphatic / aromatic hydrocarbon concentrations in order to assess any impact the historical use of the site may have had on the underlying groundwater.

15.7 EQS values are available for the following hydrocarbon fractions: toluene (EQS value of 50 µg/l), xylene (EQS value of 30 µg/l) and benzene (EQS value of 30 µg/l). For the purpose of this initial assessment the lighter aromatic hydrocarbon test results (hydrocarbon fractions C_6 to C_7 and C_7 to C_8) have been compared to the EQS for benzene (EQS value of 30 µg/l). This is a conservative approach.

15.8 The lighter aromatic hydrocarbon fractions were recorded at concentrations below the detection limit for each of these tests in the groundwater sample (concentrations of less than <10 µg/l were recorded) and are therefore also below the EQS values. This indicates that the more toxic light hydrocarbon fractions are not present at elevated concentrations.

15.9 The combined total of each of the individual hydrocarbon fractions for the groundwater sample has also been assessed. A total hydrocarbon concentration of <0.27 mg/l has been recorded within the groundwater sample. The hydrocarbon concentrations have predominantly been recorded within the heavier (C_{12} to $C_{16,}$ C_{16} to C_{21} and C_{21} to $C_{40)}$ hydrocarbon ranges. On this basis, it is considered that there is no significant threat to the groundwater/ surface water environment.

15.10 As detailed above, the conceptual model and desk study information indicates that the site is located over a geological formation classified as a Secondary Aquifer - B. Superficial deposits present at the site are also classified as a Secondary Aquifer – A. No groundwater abstraction licenses are recorded within 500m of the site. The closest water abstraction license is recorded as being located approximately 825m to the north-east of the site and the license is recorded as being for general farming and domestic purposes. The report indicates that the nearest surface water feature (an unnamed stream/ river) is located approximately 98m to the north-east of the site. The site is not identified as being located within a Source Protection Zone (SPZ).

15.11 In addition, design proposals indicate that the soils present at the site will be covered by either the new building or areas of hardstanding, draining to a new surface water system. It is understood that no areas of soft landscaping are proposed at the site. The propensity for future infiltration (and hence any potential leaching) will therefore be greatly reduced.

15.12 Overall, it is considered that the slight degree of arsenic and copper contamination detected in the groundwater beneath the site is consistent with the urban context of the surrounding environment. Given the nature of the made ground found at the site, and the soil and leachate test results detailed above, it is considered that the site is unlikely to be having a significant impact upon the ground or surface water. This already very low impact will be further reduced by the proposals for developing the site. Remedial action in this respect is therefore considered unnecessary.

15.13 The approval of the Environmental Health Officer, who may seek the advice of the Environment Agency, should be sought in respect of the above.

16. **Gas Assessment**

16.1 No assessment in terms of gas has been undertaken as part of this preliminary soil contamination assessment. Such work is outside the scope of this contamination assessment.

K.M.Willfratt
BSc FGS
Senior Geo-Environmental Engineer
NICHOLLS COLTON GEOTECHNICAL

A. Warwick
BEng CEng MICE SiLC
Director
NICHOLLS COLTON GEOTECHNICAL



A P P E N D I X A

Site Photographs

WALKOVER PHOTOGRAPHS

Description:

General view looking south.



Description:

General view looking north-west. Note containers and office to the rear north-west corner of site.



WALKOVER PHOTOGRAPHS

Description:

General view looking south-west toward access road.



A P P E N D I X B

Historical Ordnance Survey Plans

Historical Mapping Legends

Ordnance Survey County Series 1:10,560

Gravel Pit
Sand Pit
Other Pits
Quarry
Shingle
Orchard
Osiers
Reeds
Marsh
Mixed Wood
Deciduous
Brushwood
Fir
Furze
Rough Pasture
Arrow denotes flow of water
Trigonometrical Station
Site of Antiquities
Bench Mark
Pump, Guide Post, Signal Post
Well, Spring, Boundary Post
·285 Surface Level
Sketched Contour
Instrumental Contour
Main Roads
Fenced
Un-Fenced
Minor Roads
Fenced
Un-Fenced
Sunken Road
Raised Road
Road over Railway
Railway over River
Railway over Road
Level Crossing
Road over River or Canal
Road over Stream
Road over Stream
County Boundary (Geographical)
County & Civil Parish Boundary
Administrative County & Civil Parish Boundary
Co. Boro. Bdy. County Borough Boundary (England)
Co. Burgh Bdy. County Burgh Boundary (Scotland)
R.D. Bdy. Rural District Boundary
Civil Parish Boundary

Ordnance Survey Plan 1:10,000

Chalk Pit, Clay Pit or Quarry
Gravel Pit
Sand Pit
Disused Pit or Quarry
Refuse or Slag Heap
Lake, Loch or Pond
Dunes
Boulders
Coniferous Trees
Non-Coniferous Trees
Orchard
Scrub
Coppice
Bracken
Heath
Rough Grassland
Marsh
Reeds
Saltings
Building
Direction of Flow of Water
Shingle
Sand
Glasshouse
Pylon
Sloping Masonry
Electricity Transmission Line
Pole
Cutting
Embankment
Standard Gauge Multiple Track
Standard Gauge Single Track
Road Under
Road Over
Level Crossing
Foot Bridge
Siding, Tramway or Mineral Line
Narrow Gauge
Geographical County
Administrative County, County Borough or County of City
Municipal Borough, Urban or Rural District, Burgh or District Council
Borough, Burgh or County Constituency
Shown only when not coincident with other boundaries
Civil Parish
Shown alternately when coincidence of boundaries occurs

BP, BS	Boundary Post or Stone	Pol Sta	Police Station
Ch	Church	PO	Post Office
CH	Club House	PC	Public Convenience
F E Sta	Fire Engine Station	PH	Public House
FB	Foot Bridge	SB	Signal Box
Fn	Fountain	Spr	Spring
GP	Guide Post	TCB	Telephone Call Box
MP	Mile Post	TCP	Telephone Call Post
MS	Mile Stone	W	Well

1:10,000 Raster Mapping

Gravel Pit
Refuse tip or slag heap
Rock
Rock (scattered)
Boulders
Boulders (scattered)
Shingle
Mud
Sand
Sand Pit
Slopes
Top of cliff
General detail
Underground detail
Overhead detail
Narrow gauge railway
Multi-track railway
Single track railway
County boundary (England only)
Civil, parish or community boundary
District, Unitary, Metropolitan, London Borough boundary
Constituency boundary
Area of wooded vegetation
Non-coniferous trees
Non-coniferous trees (scattered)
Coniferous trees
Coniferous trees (scattered)
Positioned tree
Orchard
Coppice or Osiers
Rough Grassland
Heath
Scrub
Marsh, Salt Marsh or Reeds
Water feature
Flow arrows
MHW(S) Mean high water (springs)
MLW(S) Mean low water (springs)
Telephone line (where shown)
Electricity transmission line (with poles)
BM 123.45 m Bench mark (where shown)
Triangulation station
Point feature (e.g. Guide Post or Mile Stone)
Pylon, flare stack or lighting tower
Site of (antiquity)
Glasshouse
General Building
Important Building

Nicholls Colton
GEOTECHNICAL
7-11 Harding Street, Leicester LE1 4DH
Tel: 0116 253 6333. Fax: 0116 251 4709

Historical Mapping & Photography included:

Mapping Type	Scale	Date	Pg
Leicestershire	1:10,560	1885	2
Leicestershire	1:10,560	1903 - 1904	3
Leicestershire	1:10,560	1919	4
Leicestershire	1:10,560	1930 - 1931	5
Ordnance Survey Plan	1:10,000	1955	6
Ordnance Survey Plan	1:10,000	1966 - 1968	7
Ordnance Survey Plan	1:10,000	1982 - 1985	8
10K Raster Mapping	1:10,000	2000	9
10K Raster Mapping	1:10,000	2006	10
10K Raster Mapping	1:10,000	2010	11

Historical Map - Slice A

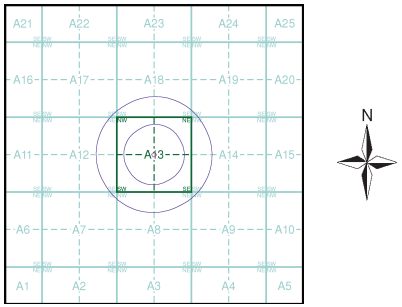

Order Details

Order Number: 34008336_1_1
Customer Ref: G11037
National Grid Reference: 446700, 306330
Slice: A
Site Area (Ha): 0.11
Search Buffer (m): 500

Site Details

8 Merrylees Industrial Estate, Leeside, Desford, LEICESTER, LE9 9FS

Landmark Information Group
Tel: 0844 844 9952
Fax: 0844 844 9951
Web: www.envirocheck.co.uk

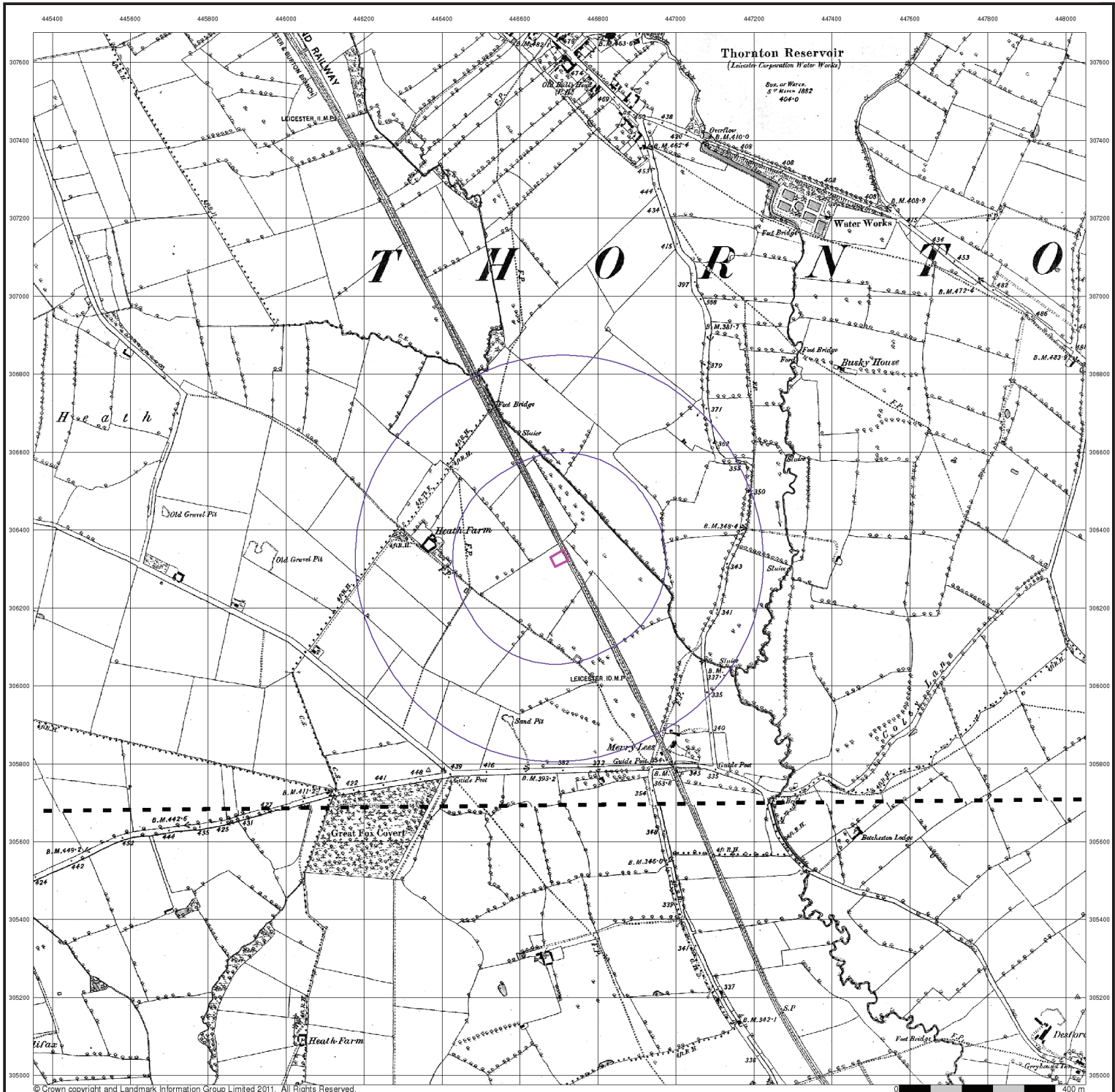

© Crown copyright and Landmark Information Group Limited 2011. All Rights Reserved.

Nicholls Colton
GEOTECHNICAL
7-11 Harding Street, Leicester LE1 4DH
Tel: 0116 253 6333. Fax: 0116 251 4709

Leicestershire

Published 1885

Source map scale - 1:10,560

The historical maps shown were reproduced from maps predominantly held at the scale adopted for England, Wales and Scotland in the 1840's. In 1854 the 1:2,500 scale was adopted for mapping urban areas; these maps were used to update the 1:10,560 maps. The published date given therefore is often some years later than the surveyed date. Before 1938, all OS maps were based on the Cassini Projection, with independent surveys of a single county or group of counties, giving rise to significant inaccuracies in outlying areas. In the late 1940's, a Provisional Edition was produced, which updated the 1:10,560 mapping from a number of sources. The maps appear unfinished - with all military camps and other strategic sites removed. These maps were initially overprinted with the National Grid. In 1970, the first 1:10,000 maps were produced using the Transverse Mercator Projection. The revision process continued until recently, with new editions appearing every 10 years or so for urban areas.

Map Name(s) and Date(s)

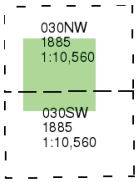

Historical Map - Slice A

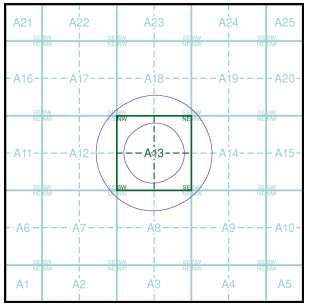

Order Details

Order Number:	34008336_1_1
Customer Ref:	G11037
National Grid Reference:	446700, 306330
Slice:	A
Site Area (Ha):	0.11
Search Buffer (m):	500

Site Details

8 Merrylees Industrial Estate, Leeside, Desford, LEICESTER, LE9 9FS

Landmark Information Group
Tel: 0844 844 9952
Fax: 0844 844 9951
Web: www.envirocheck.co.uk

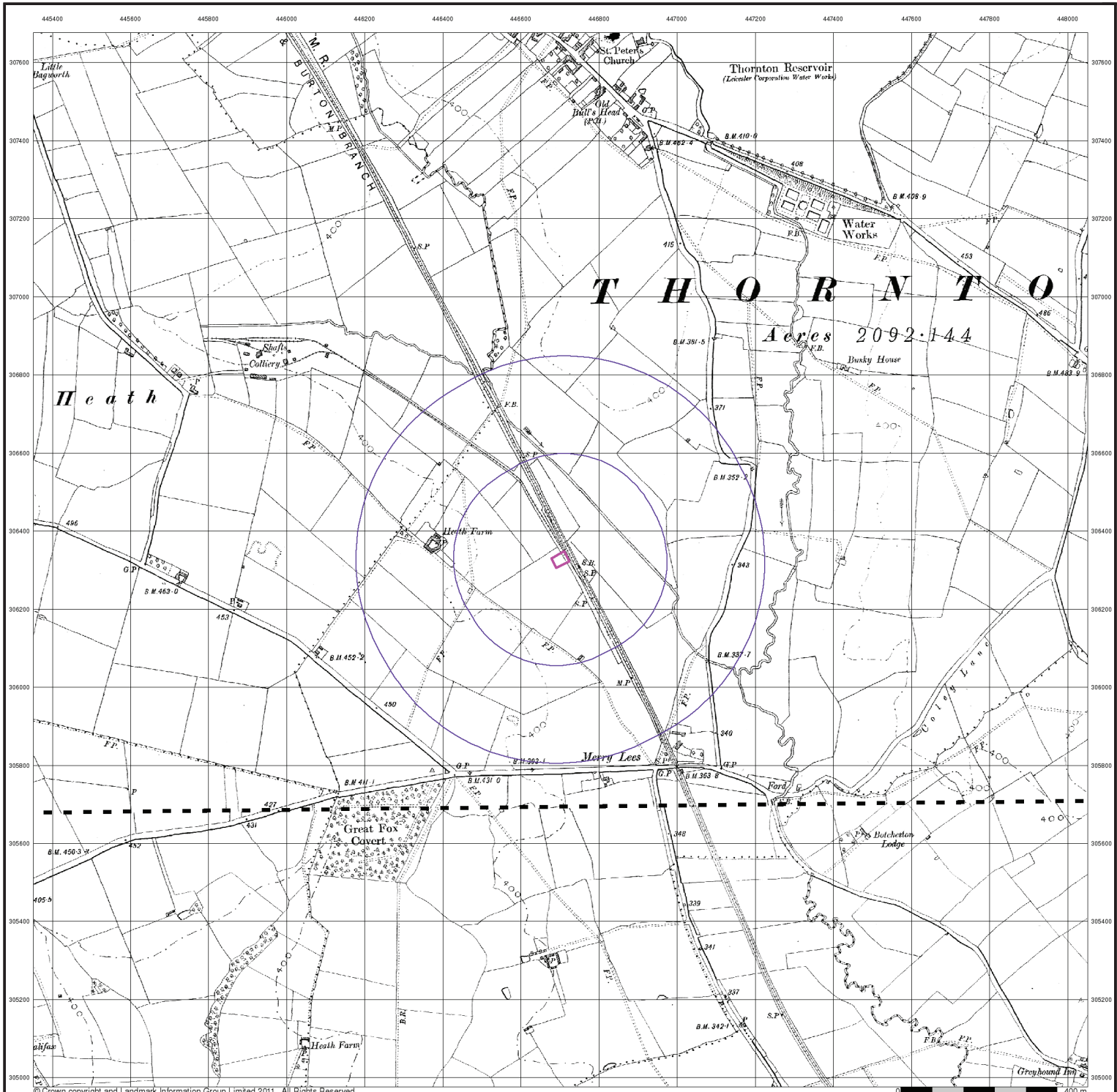

© Crown copyright and Landmark Information Group Limited 2011. All Rights Reserved.

Nicholls Colton
GEOTECHNICAL
7-11 Harding Street, Leicester LE1 4DH
Tel: 0116 253 6333. Fax: 0116 251 4709

Leicestershire

Published 1903 - 1904

Source map scale - 1:10,560

The historical maps shown were reproduced from maps predominantly held at the scale adopted for England, Wales and Scotland in the 1840's. In 1854 the 1:2,500 scale was adopted for mapping urban areas; these maps were used to update the 1:10,560 maps. The published date given therefore is often some years later than the surveyed date. Before 1938, all OS maps were based on the Cassini Projection, with independent surveys of a single county or group of counties, giving rise to significant inaccuracies in outlying areas. In the late 1940's, a Provisional Edition was produced, which updated the 1:10,560 mapping from a number of sources. The maps appear unfinished - with all military camps and other strategic sites removed. These maps were initially overprinted with the National Grid. In 1970, the first 1:10,000 maps were produced using the Transverse Mercator Projection. The revision process continued until recently, with new editions appearing every 10 years or so for urban areas.

Map Name(s) and Date(s)

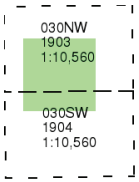

Historical Map - Slice A

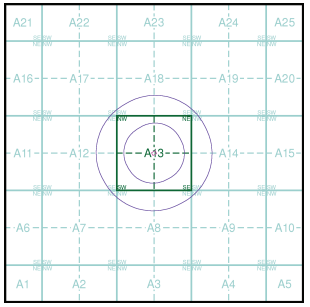

Order Details

Order Number:	34008336_1_1
Customer Ref:	G11037
National Grid Reference:	446700, 306330
Slice:	A
Site Area (Ha):	0.11
Search Buffer (m):	500

Site Details

8 Merrylees Industrial Estate, Leeside, Desford, LEICESTER, LE9 9FS

Landmark Information Group
Tel: 0844 844 9952
Fax: 0844 844 9951
Web: www.envirocheck.co.uk

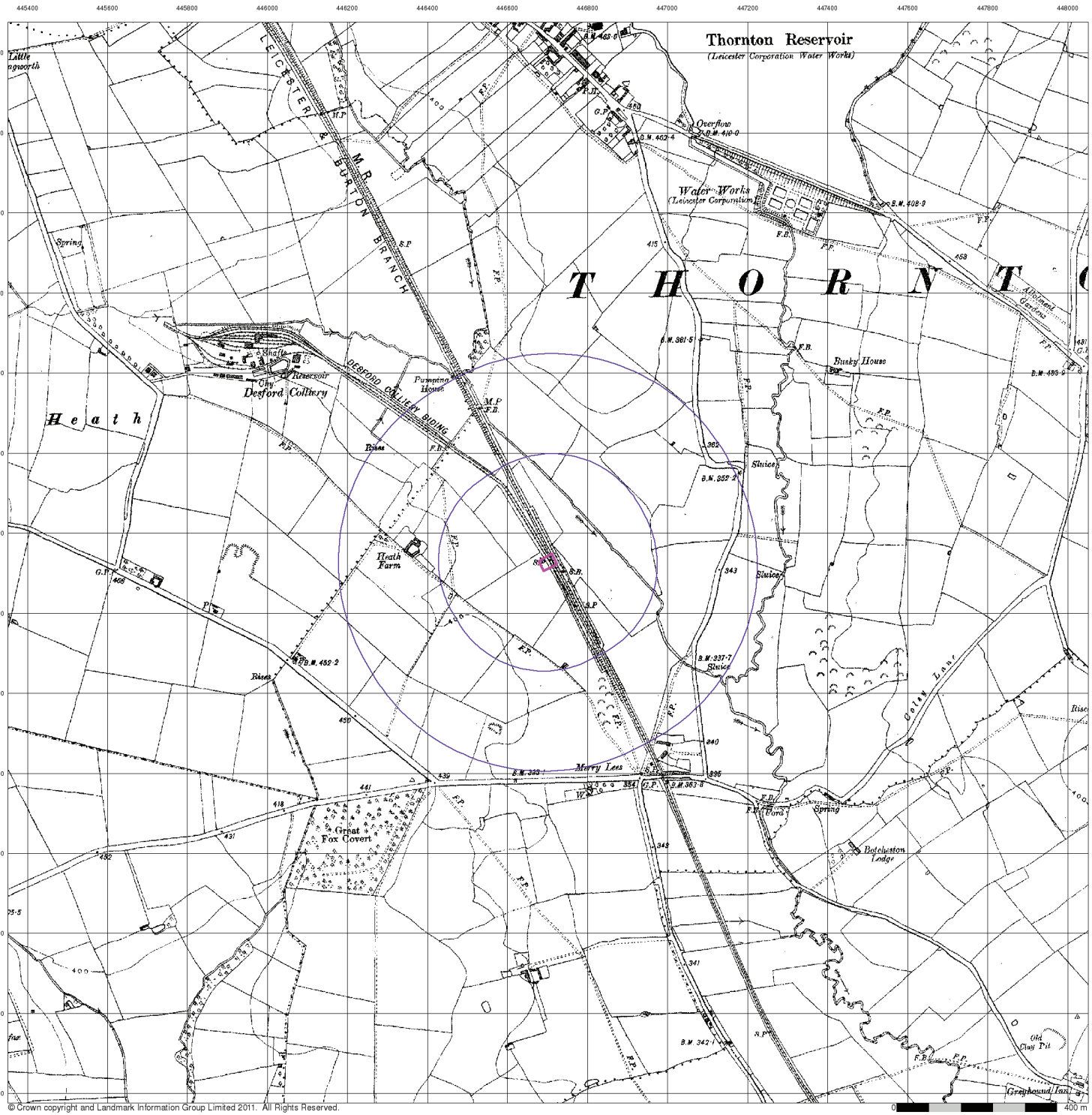

© Crown copyright and Landmark Information Group Limited 2011. All Rights Reserved.

Nicholls Colton
GEOTECHNICAL
7-11 Harding Street, Leicester LE1 4DH
Tel: 0116 253 6333. Fax: 0116 251 4709

Leicestershire

Published 1919

Source map scale - 1:10,560

The historical maps shown were reproduced from maps predominantly held at the scale adopted for England, Wales and Scotland in the 1840's. In 1854 the 1:2,500 scale was adopted for mapping urban areas; these maps were used to update the 1:10,560 maps. The published date given therefore is often some years later than the surveyed date. Before 1938, all OS maps were based on the Cassini Projection, with independent surveys of a single county or group of counties, giving rise to significant inaccuracies in outlying areas. In the late 1940's, a Provisional Edition was produced, which updated the 1:10,560 mapping from a number of sources. The maps appear unfinished - with all military camps and other strategic sites removed. These maps were initially overprinted with the National Grid. In 1970, the first 1:10,000 maps were produced using the Transverse Mercator Projection. The revision process continued until recently, with new editions appearing every 10 years or so for urban areas.

Map Name(s) and Date(s)

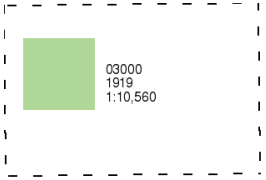

Historical Map - Slice A

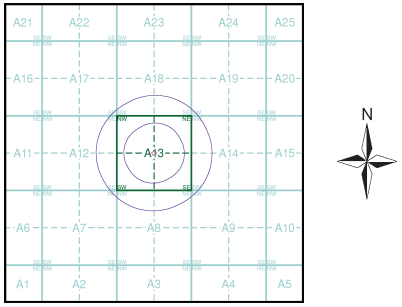

Order Details

Order Number:	34008336_1_1
Customer Ref:	G11037
National Grid Reference:	446700, 306330
Slice:	A
Site Area (Ha):	0.11
Search Buffer (m):	500

Site Details

8 Merrylees Industrial Estate, Leeside, Desford, LEICESTER, LE9 9FS

Landmark Information Group
Tel: 0844 844 9952
Fax: 0844 844 9951
Web: www.envirocheck.co.uk

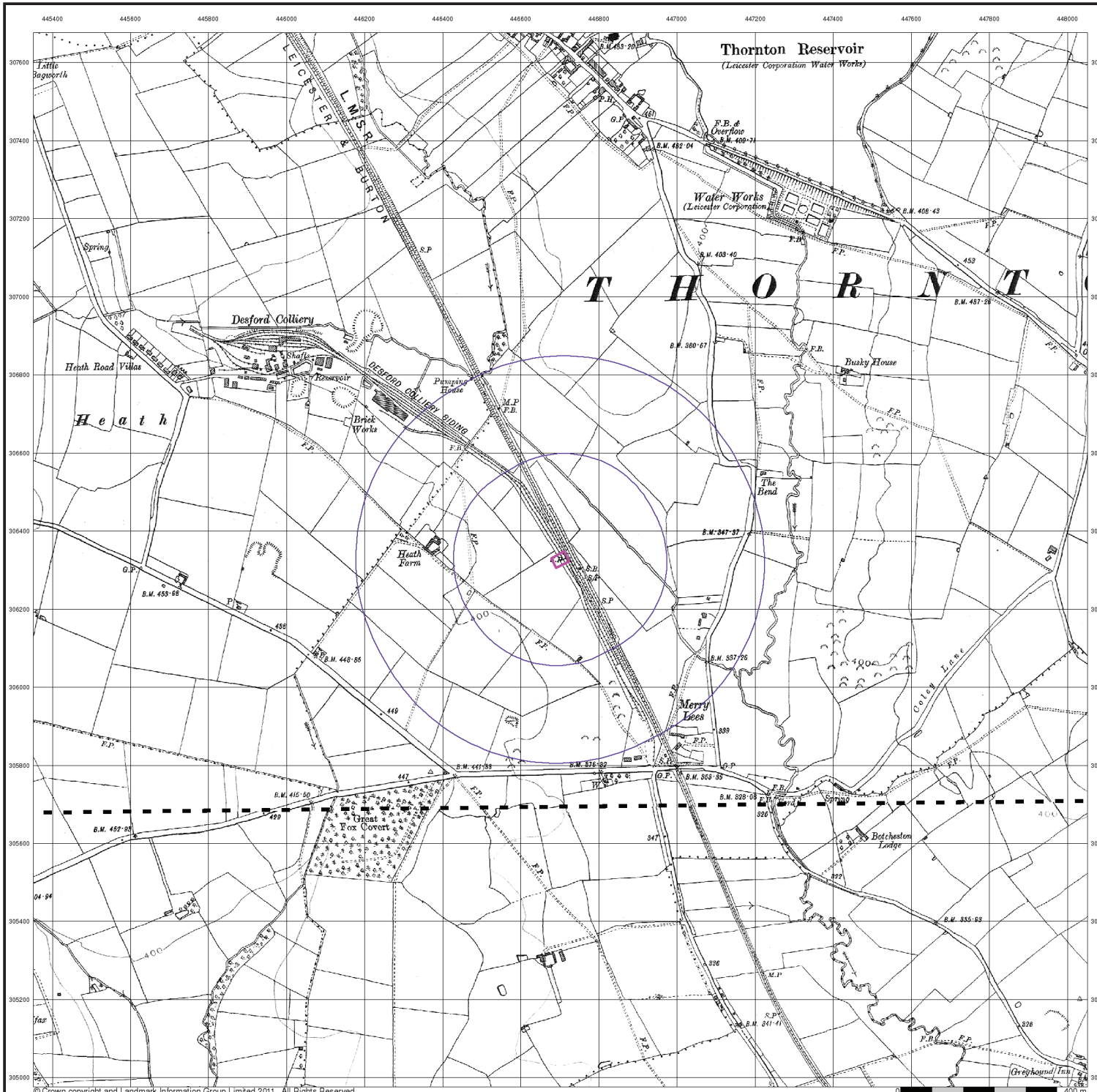

© Crown copyright and Landmark Information Group Limited 2011. All Rights Reserved.

Nicholls Colton
GEOTECHNICAL
7-11 Harding Street, Leicester LE1 4DH
Tel: 0116 253 6333. Fax: 0116 251 4709

Leicestershire

Published 1930 - 1931

Source map scale - 1:10,560

The historical maps shown were reproduced from maps predominantly held at the scale adopted for England, Wales and Scotland in the 1840's. In 1854 the 1:2,500 scale was adopted for mapping urban areas; these maps were used to update the 1:10,560 maps. The published date given therefore is often some years later than the surveyed date. Before 1938, all OS maps were based on the Cassini Projection, with independent surveys of a single county or group of counties, giving rise to significant inaccuracies in outlying areas. In the late 1940's, a Provisional Edition was produced, which updated the 1:10,560 mapping from a number of sources. The maps appear unfinished - with all military camps and other strategic sites removed. These maps were initially overprinted with the National Grid. In 1970, the first 1:10,000 maps were produced using the Transverse Mercator Projection. The revision process continued until recently, with new editions appearing every 10 years or so for urban areas.

Map Name(s) and Date(s)

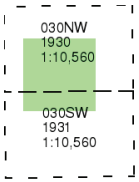

Historical Map - Slice A

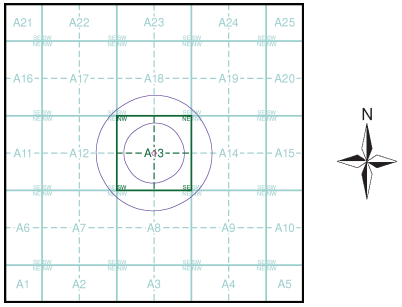

Order Details

Order Number:	34008336_1_1
Customer Ref:	G11037
National Grid Reference:	446700, 306330
Slice:	A
Site Area (Ha):	0.11
Search Buffer (m):	500

Site Details

8 Merrylees Industrial Estate, Leeside, Desford, LEICESTER, LE9 9FS

Landmark Information Group
Tel: 0844 844 9952
Fax: 0844 844 9951
Web: www.envirocheck.co.uk



© Crown copyright and Landmark Information Group Limited 2011. All Rights Reserved.

Nicholls Colton
GEOTECHNICAL
7-11 Harding Street, Leicester LE1 4DH
Tel: 0116 253 6333. Fax: 0116 251 4709

Ordnance Survey Plan

Published 1955

Source map scale - 1:10,000

The historical maps shown were reproduced from maps predominantly held at the scale adopted for England, Wales and Scotland in the 1840's. In 1854 the 1:2,500 scale was adopted for mapping urban areas; these maps were used to update the 1:10,560 maps. The published date given therefore is often some years later than the surveyed date. Before 1938, all OS maps were based on the Cassini Projection, with independent surveys of a single county or group of counties, giving rise to significant inaccuracies in outlying areas. In the late 1940's, a Provisional Edition was produced, which updated the 1:10,560 mapping from a number of sources. The maps appear unfinished - with all military camps and other strategic sites removed. These maps were initially overprinted with the National Grid. In 1970, the first 1:10,000 maps were produced using the Transverse Mercator Projection. The revision process continued until recently, with new editions appearing every 10 years or so for urban areas.

Map Name(s) and Date(s)

SK40NE
1955
1:10,560

SK40SE
1955
1:10,560

Historical Map - Slice A

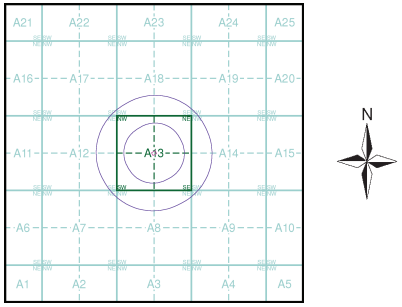

Order Details

Order Number:	34008336_1_1
Customer Ref:	G11037
National Grid Reference:	446700, 306330
Slice:	A
Site Area (Ha):	0.11
Search Buffer (m):	500

Site Details

8 Merrylees Industrial Estate, Leeside, Desford, LEICESTER, LE9 9FS

Landmark Information Group
Tel: 0844 844 9952
Fax: 0844 844 9951
Web: www.envirocheck.co.uk

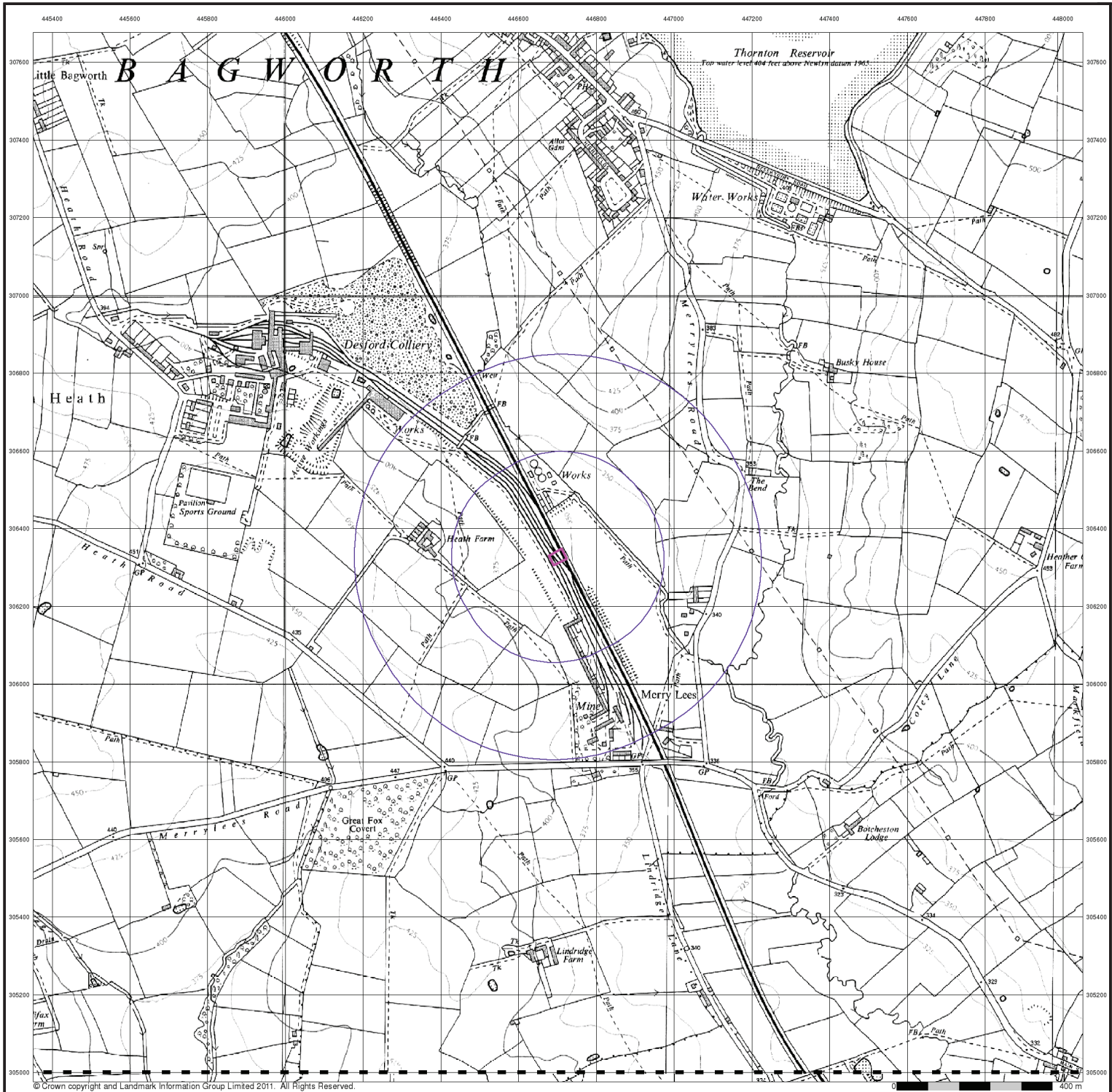

© Crown copyright and Landmark Information Group Limited 2011. All Rights Reserved.

Nicholls Colton
GEOTECHNICAL
7-11 Harding Street, Leicester LE1 4DH
Tel: 0116 253 6333. Fax: 0116 251 4709

Ordnance Survey Plan

Published 1966 - 1968

Source map scale - 1:10,000

The historical maps shown were reproduced from maps predominantly held at the scale adopted for England, Wales and Scotland in the 1840's. In 1854 the 1:2,500 scale was adopted for mapping urban areas; these maps were used to update the 1:10,560 maps. The published date given therefore is often some years later than the surveyed date. Before 1938, all OS maps were based on the Cassini Projection, with independent surveys of a single county or group of counties, giving rise to significant inaccuracies in outlying areas. In the late 1940's, a Provisional Edition was produced, which updated the 1:10,560 mapping from a number of sources. The maps appear unfinished - with all military camps and other strategic sites removed. These maps were initially overprinted with the National Grid. In 1970, the first 1:10,000 maps were produced using the Transverse Mercator Projection. The revision process continued until recently, with new editions appearing every 10 years or so for urban areas.

Map Name(s) and Date(s)

SK40NE
1968
1:10,560

SK40SE
1966
1:10,560

Historical Map - Slice A

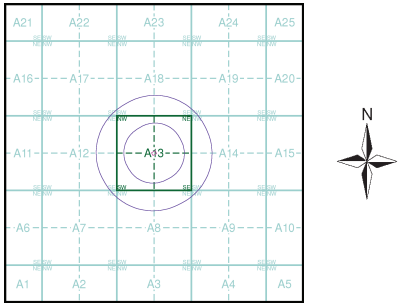

Order Details

Order Number:	34008336_1_1
Customer Ref:	G11037
National Grid Reference:	446700, 306330
Slice:	A
Site Area (Ha):	0.11
Search Buffer (m):	500

Site Details

8 Merrylees Industrial Estate, Leeside, Desford, LEICESTER, LE9 9FS

Landmark Information Group
Tel: 0844 844 9952
Fax: 0844 844 9951
Web: www.envirocheck.co.uk

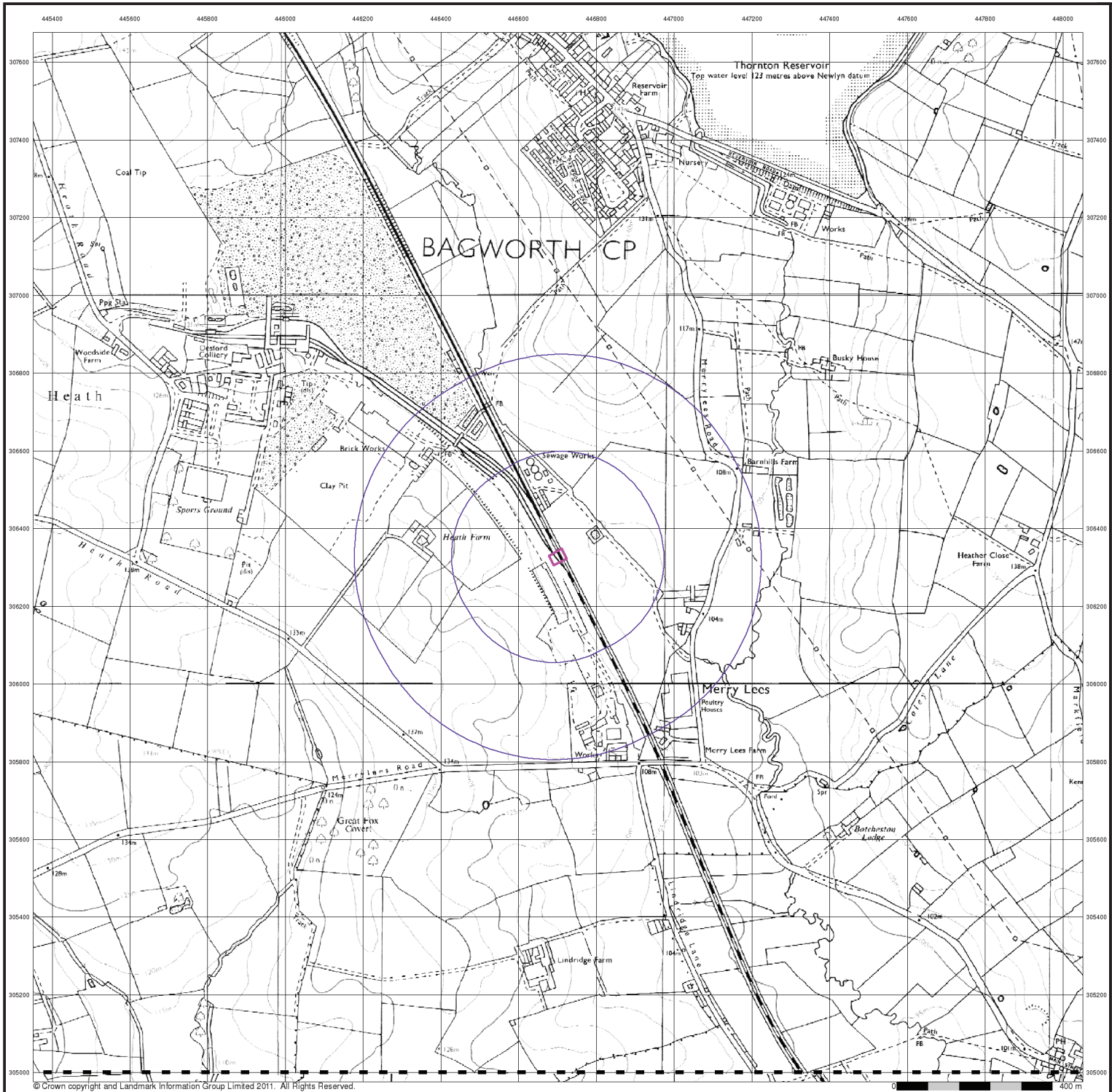

© Crown copyright and Landmark Information Group Limited 2011. All Rights Reserved.

Nicholls Colton
GEOTECHNICAL
7-11 Harding Street, Leicester LE1 4DH
Tel: 0116 253 6333. Fax: 0116 251 4709

Ordnance Survey Plan

Published 1982 - 1985

Source map scale - 1:10,000

The historical maps shown were reproduced from maps predominantly held at the scale adopted for England, Wales and Scotland in the 1840's. In 1854 the 1:2,500 scale was adopted for mapping urban areas; these maps were used to update the 1:10,560 maps. The published date given therefore is often some years later than the surveyed date. Before 1938, all OS maps were based on the Cassini Projection, with independent surveys of a single county or group of counties, giving rise to significant inaccuracies in outlying areas. In the late 1940's, a Provisional Edition was produced, which updated the 1:10,560 mapping from a number of sources. The maps appear unfinished - with all military camps and other strategic sites removed. These maps were initially overprinted with the National Grid. In 1970, the first 1:10,000 maps were produced using the Transverse Mercator Projection. The revision process continued until recently, with new editions appearing every 10 years or so for urban areas.

Map Name(s) and Date(s)

SK40NE
1985
1:10,000

SK40SE
1982
1:10,000

Historical Map - Slice A

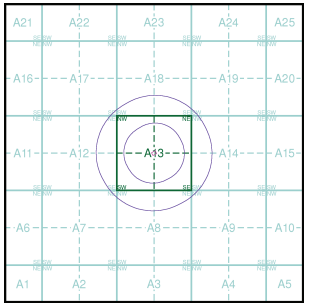

Order Details

Order Number:	34008336_1_1
Customer Ref:	G11037
National Grid Reference:	446700, 306330
Slice:	A
Site Area (Ha):	0.11
Search Buffer (m):	500

Site Details

8 Merrylees Industrial Estate, Leeside, Desford, LEICESTER, LE9 9FS

Landmark Information Group
Tel: 0844 844 9952
Fax: 0844 844 9951
Web: www.envirocheck.co.uk

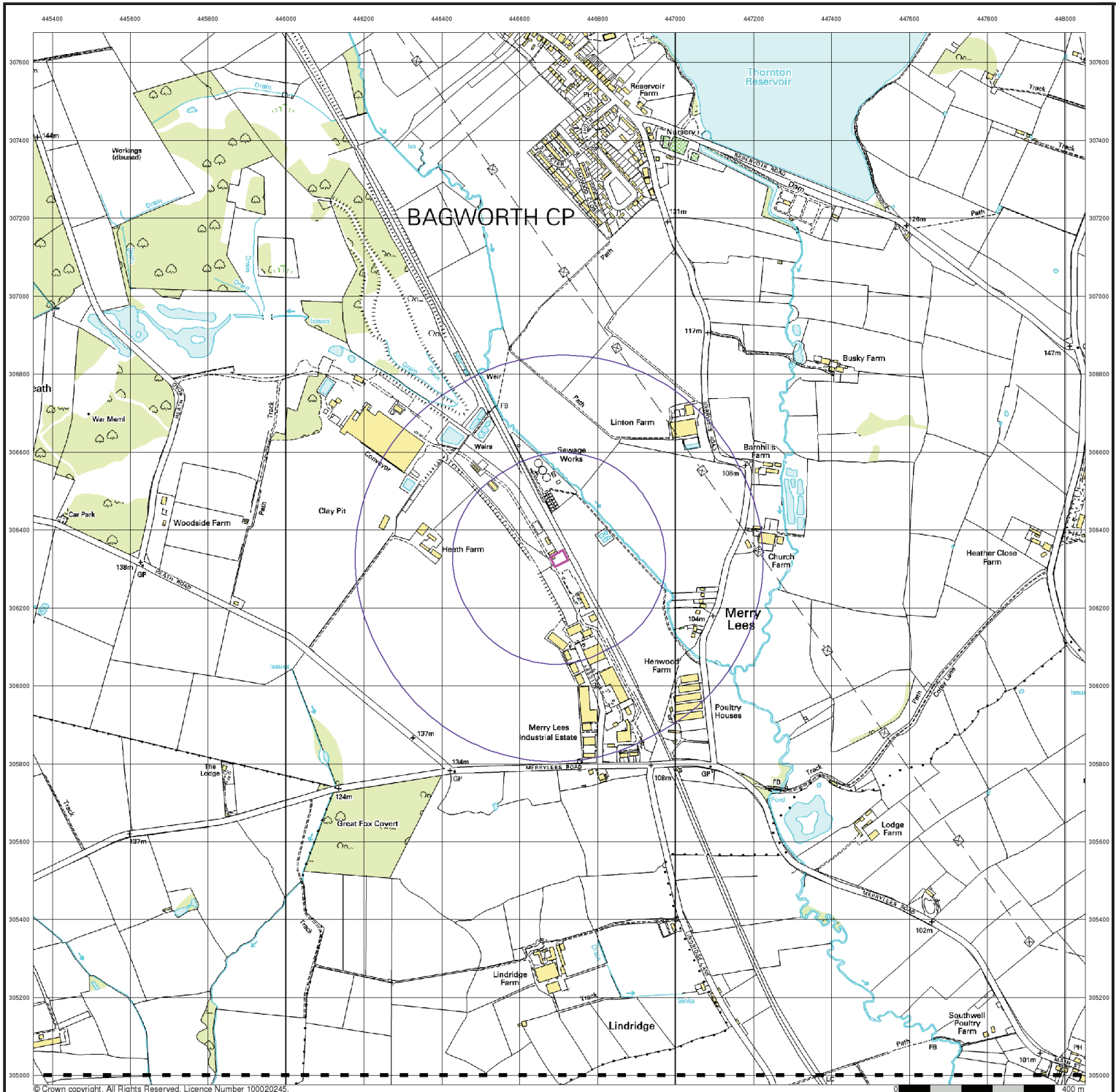

Nicholls Colton
GEOTECHNICAL
7-11 Harding Street, Leicester LE1 4DH
Tel: 0116 253 6333. Fax: 0116 251 4709

10k Raster Mapping

Published 2000

Source map scale - 1:10,000

The historical maps shown were produced from the Ordnance Survey`s 1:10,000 colour raster mapping. These maps are derived from Landplan which replaced the old 1:10,000 maps originally published in 1970. The data is highly detailed showing buildings, fences and field boundaries as well as all roads, tracks and paths. Road names are also included together with the relevant road number and classification. Boundary information depiction includes county, unitary authority, district, civil parish and constituency.

Map Name(s) and Date(s)

SK40NE 2000 1:10,000

SK40SE 2000 1:10,000

Historical Map - Slice A

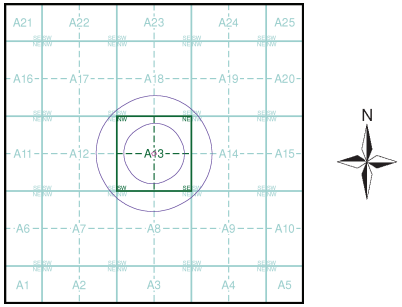

Order Details

Order Number:	34008336_1_1
Customer Ref:	G11037
National Grid Reference:	446700, 306330
Slice:	A
Site Area (Ha):	0.11
Search Buffer (m):	500

Site Details

8 Merrylees Industrial Estate, Leeside, Desford, LEICESTER, LE9 9FS

Landmark Information Group
Tel: 0844 844 9952
Fax: 0844 844 9951
Web: www.envirocheck.co.uk

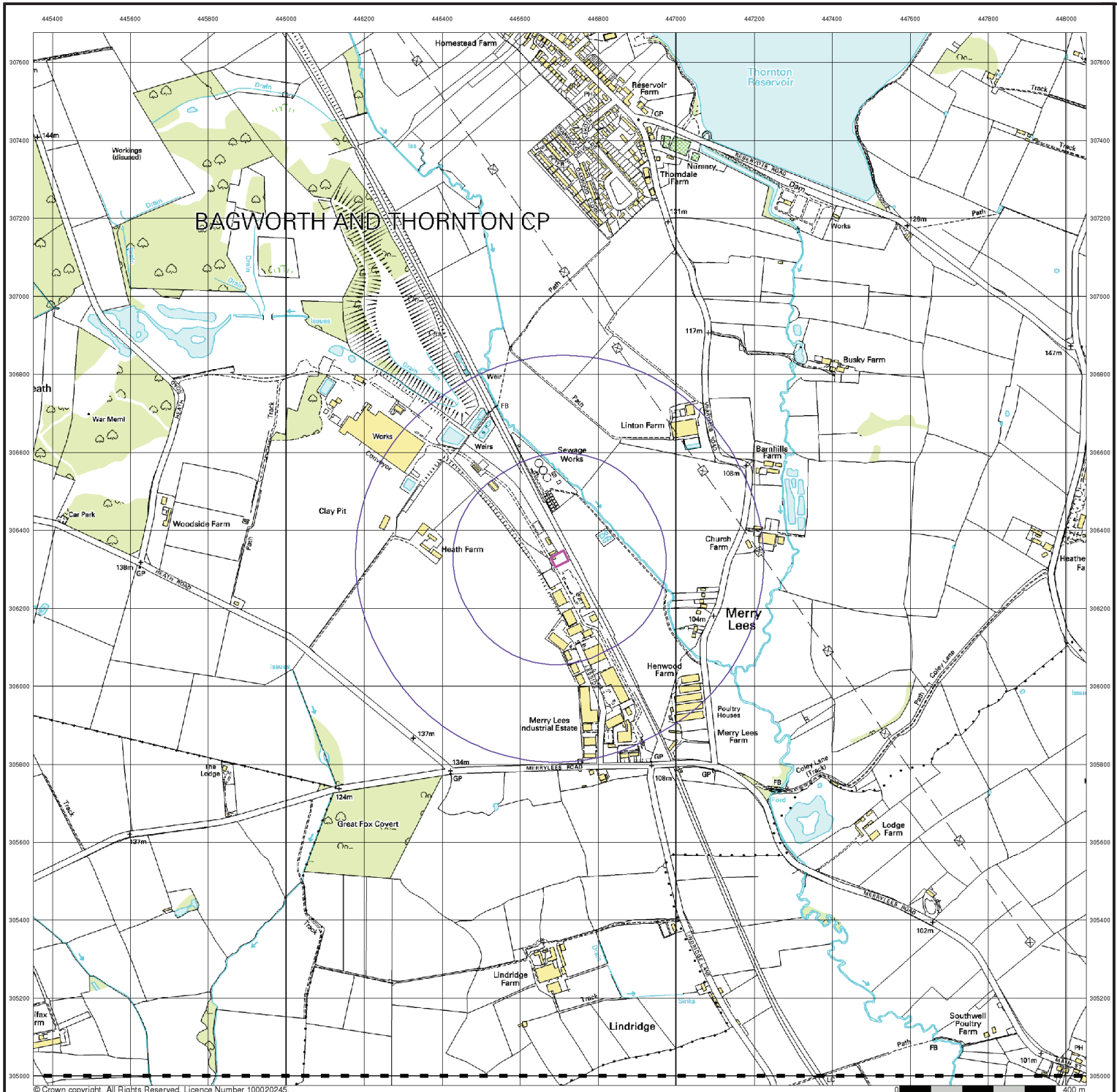

Nicholls Colton
GEOTECHNICAL
7-11 Harding Street, Leicester LE1 4DH
Tel: 0116 253 6333. Fax: 0116 251 4709

10k Raster Mapping

Published 2006

Source map scale - 1:10,000

The historical maps shown were produced from the Ordnance Survey`s 1:10,000 colour raster mapping. These maps are derived from Landplan which replaced the old 1:10,000 maps originally published in 1970. The data is highly detailed showing buildings, fences and field boundaries as well as all roads, tracks and paths. Road names are also included together with the relevant road number and classification. Boundary information depiction includes county, unitary authority, district, civil parish and constituency.

Map Name(s) and Date(s)

SK40NE 2006 1:10,000

SK40SE 2006 1:10,000

Historical Map - Slice A

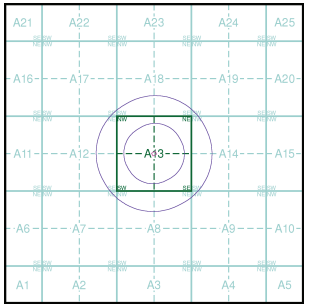

Order Details

Order Number:	34008336_1_1
Customer Ref:	G11037
National Grid Reference:	446700, 306330
Slice:	A
Site Area (Ha):	0.11
Search Buffer (m):	500

Site Details

8 Merrylees Industrial Estate, Leeside, Desford, LEICESTER, LE9 9FS

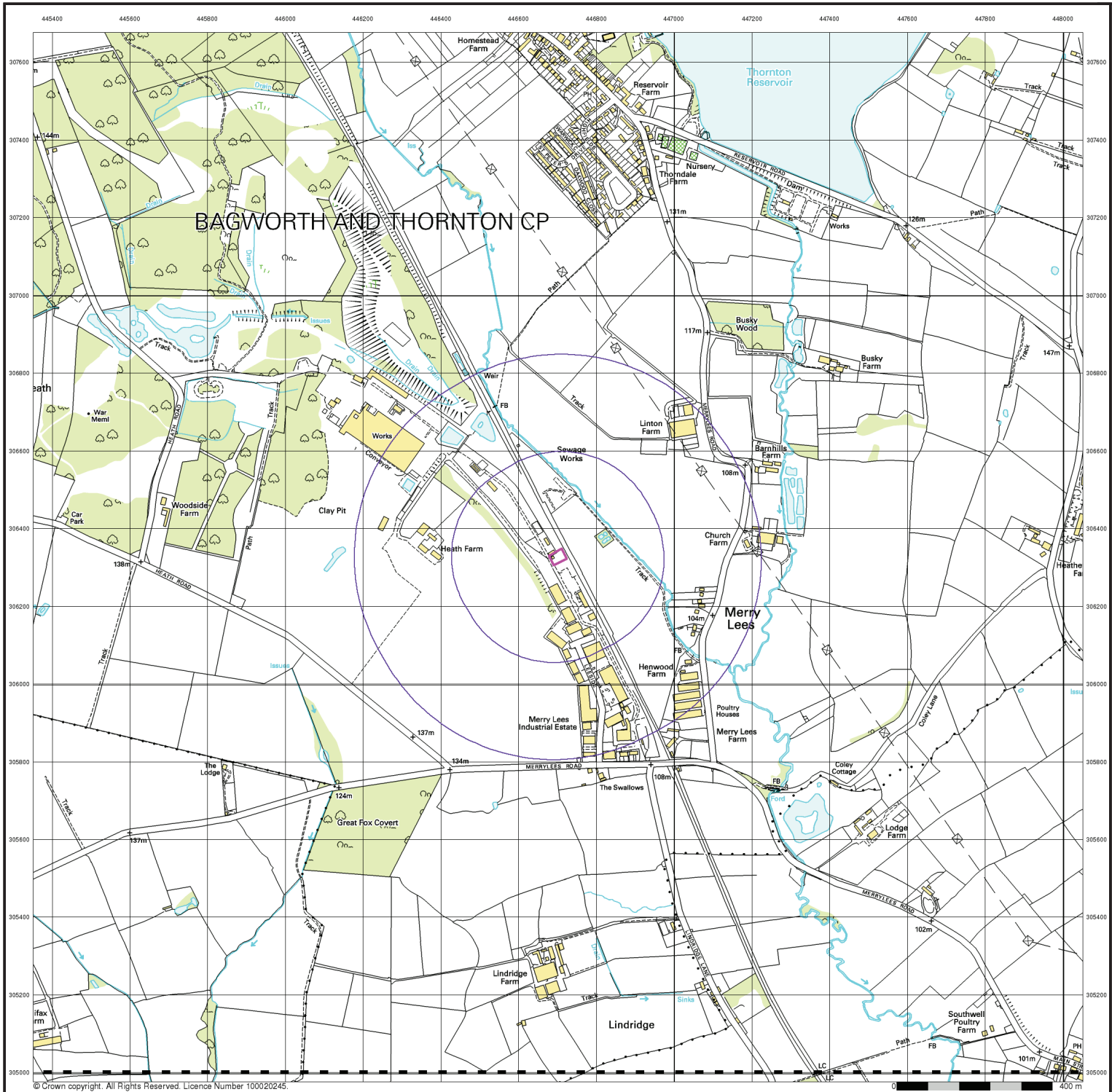

© Crown copyright. All Rights Reserved. Licence Number 100020245.

Nicholls Colton
GEOTECHNICAL
7-11 Harding Street, Leicester LE1 4DH
Tel: 0116 253 6333. Fax: 0116 251 4709

10k Raster Mapping

Published 2010

Source map scale - 1:10,000

The historical maps shown were produced from the Ordnance Survey`s 1:10,000 colour raster mapping. These maps are derived from Landplan which replaced the old 1:10,000 maps originally published in 1970. The data is highly detailed showing buildings, fences and field boundaries as well as all roads, tracks and paths. Road names are also included together with the relevant road number and classification. Boundary information depiction includes county, unitary authority, district, civil parish and constituency.

Map Name(s) and Date(s)

SK40NE 2010 1:10,000

SK40SE 2010 1:10,000

Historical Map - Slice A

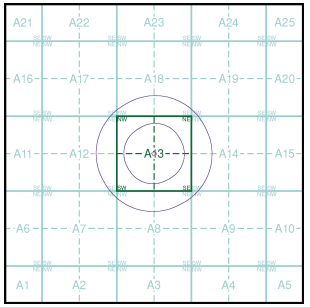

Order Details

Order Number:	34008336_1_1
Customer Ref:	G11037
National Grid Reference:	446700, 306330
Slice:	A
Site Area (Ha):	0.11
Search Buffer (m):	500

Site Details

8 Merrylees Industrial Estate, Leeside, Desford, LEICESTER, LE9 9FS

Landmark Information Group
Tel: 0844 844 9952
Fax: 0844 844 9951
Web: www.envirocheck.co.uk

Historical Mapping Legends

Ordnance Survey County Series and Ordnance Survey Plan 1:2,500

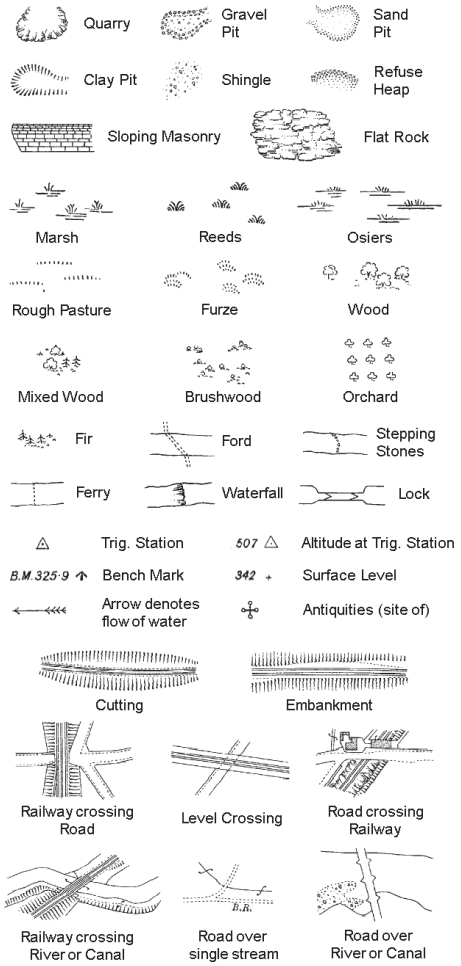

B P B S	Boundary Post or Stone	P.C.B	Police Call Box
B.R.	Bridle Road	P	Pump
E.P	Electricity Pylon	S.P	Signal Post
F.B.	Foot Bridge	St.	Sluice
F.P.	Foot Path	Sp.	Spring
G.P	Guide Post or Board	T.C.B	Telephone Call Box
M.S	Mile Stone	Tr.	Trough
M.P M.R	Mooring Post or Ring	W	Well

Ordnance Survey Plan, Additional SIMs and Supply of Unpublished Survey Information 1:2,500 and 1:1,250

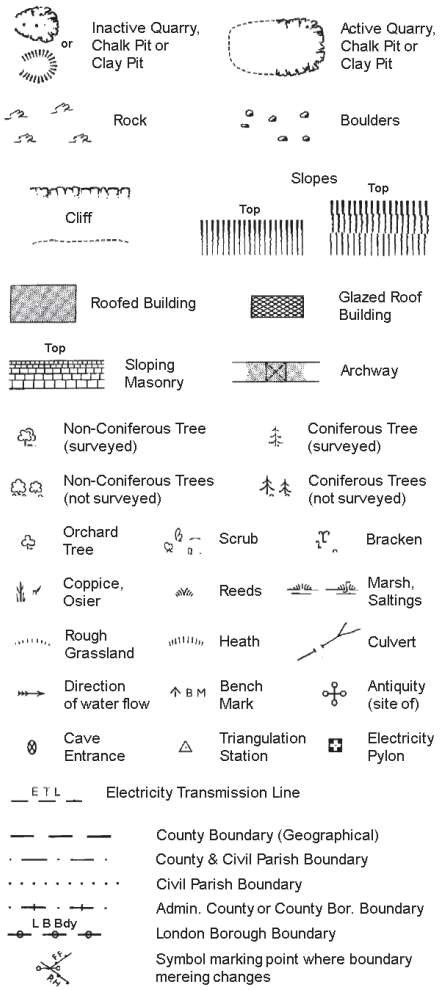

BH	Beer House	P	Pillar, Pole or Post
BP, BS	Boundary Post or Stone	PO	Post Office
Cn, C	Capstan, Crane	PC	Public Convenience
Chy	Chimney	PH	Public House
D Fn	Drinking Fountain	Pp	Pump
El P	Electricity Pillar or Post	SB, S Br	Signal Box or Bridge
FAP	Fire Alarm Pillar	SP, SL	Signal Post or Light
FB	Foot Bridge	Spr	Spring
GP	Guide Post	Tk	Tank or Track
H	Hydrant or Hydraulic	TCB	Telephone Call Box
LC	Level Crossing	TCP	Telephone Call Post
MH	Manhole	Tr	Trough
MP	Mile Post or Mooring Post	Wr Pt, Wr T	Water Point, Water Tap
MS	Mile Stone	W	Well
NTL	Normal Tidal Limit	Wd Pp	Wind Pump

Large-Scale National Grid Data 1:2,500 and 1:1,250

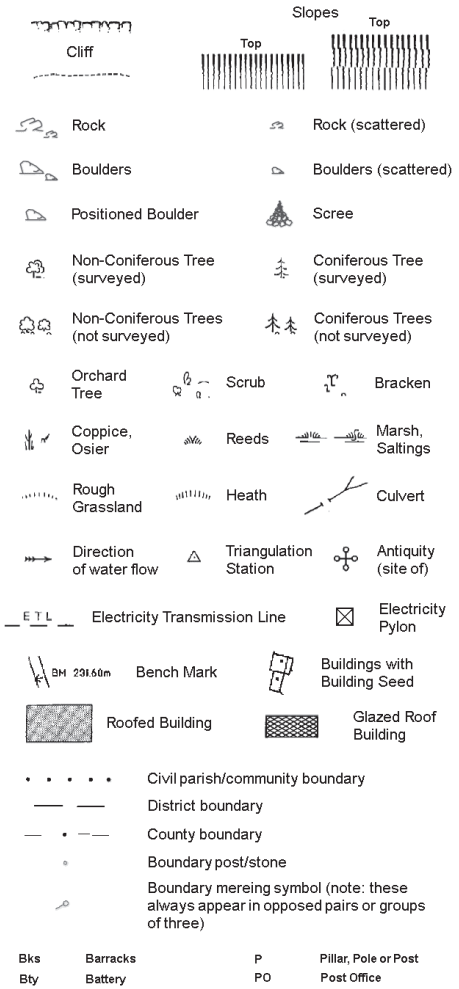

Bks	Barracks	P	Pillar, Pole or Post
Bty	Battery	PO	Post Office
Cemy	Cemetery	PC	Public Convenience
Chy	Chimney	Pp	Pump
Cis	Cistern	Ppg Sta	Pumping Station
Dismtd Rly	Dismantled Railway	PW	Place of Worship
El Gen Sta	Electricity Generating Station	Sewage Ppg Sta	Sewage Pumping Station
El P	Electricity Pole, Pillar	SB, S Br	Signal Box or Bridge
El Sub Sta	Electricity Sub Station	SP, SL	Signal Post or Light
FB	Filter Bed	Spr	Spring
Fn / D Fn	Fountain / Drinking Ftn.	Tk	Tank or Track
Gas Gov	Gas Valve Compound	Tr	Trough
GVC	Gas Governer	Wd Pp	Wind Pump
GP	Guide Post	Wr Pt, Wr T	Water Point, Water Tap
MH	Manhole	Wks	Works (building or area)
MP, MS	Mile Post or Mile Stone	W	Well

Nicholls Colton
GEOTECHNICAL
7-11 Harding Street, Leicester LE1 4DH
Tel: 0116 253 6333. Fax: 0116 251 4709

Historical Mapping & Photography included:

Mapping Type	Scale	Date	Pg
Leicestershire	1:2,500	1886	2
Leicestershire	1:2,500	1903	3
Leicestershire	1:2,500	1915	4
Leicestershire	1:2,500	1930	5
Ordnance Survey Plan	1:2,500	1959	6
Additional SIMs	1:2,500	1959 - 1989	7
Additional SIMs	1:2,500	1984 - 1990	8
Additional SIMs	1:2,500	1991	9
Large-Scale National Grid Data	1:2,500	1994	10
Large-Scale National Grid Data	1:2,500	1995	11

Historical Map - Segment A13

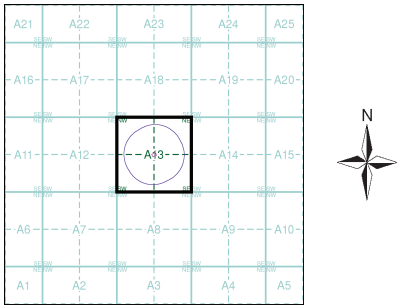

Order Details

Order Number: 34008336_1_1
Customer Ref: G11037
National Grid Reference: 446700, 306330
Slice: A
Site Area (Ha): 0.11
Search Buffer (m): 250

Site Details

8 Merrylees Industrial Estate, Leeside, Desford, LEICESTER, LE9 9FS

Landmark Information Group
Tel: 0844 844 9952
Fax: 0844 844 9951
Web: www.envirocheck.co.uk

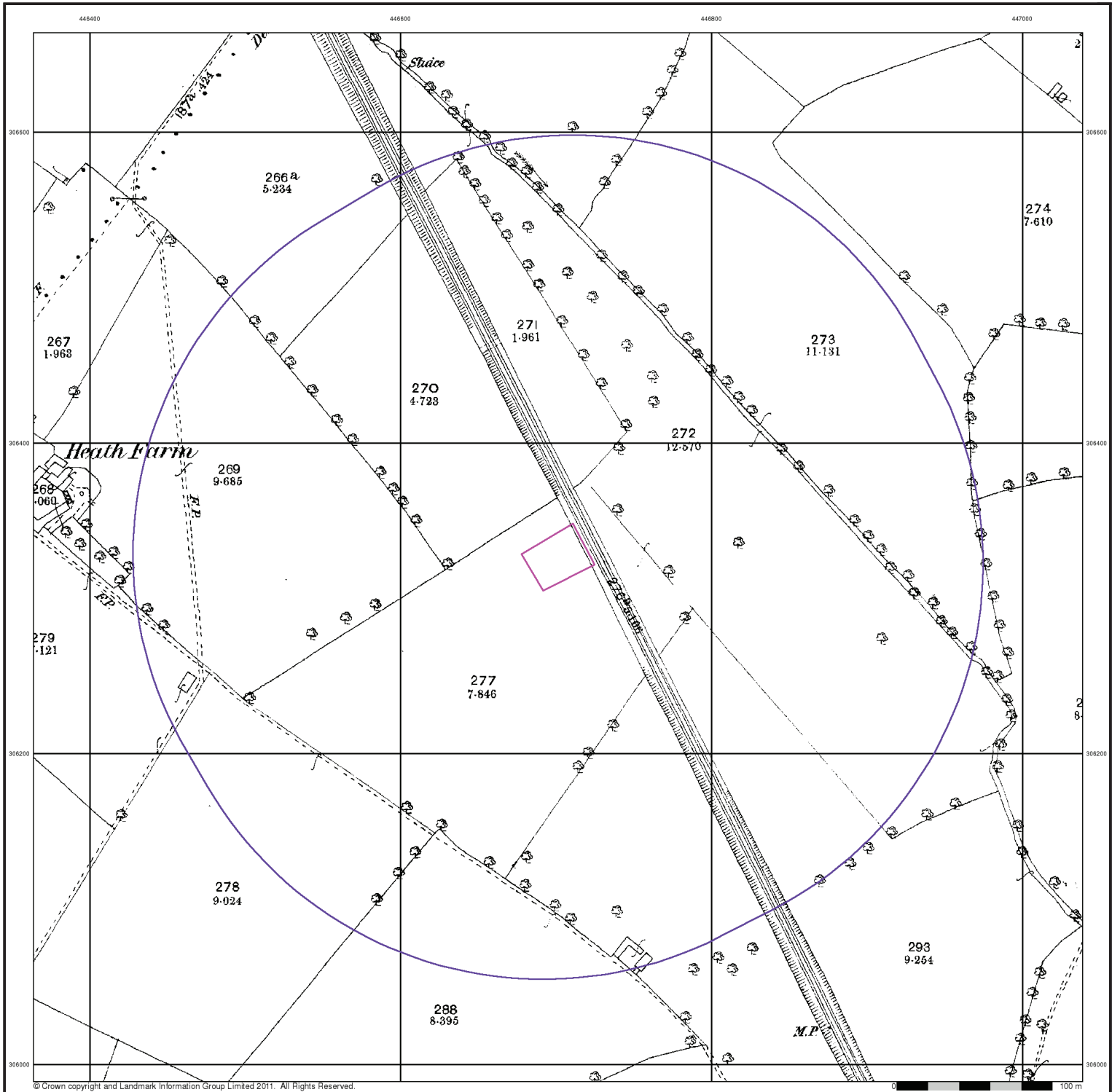

© Crown copyright and Landmark Information Group Limited 2011. All Rights Reserved.

Nicholls Colton
GEOTECHNICAL
7-11 Harding Street, Leicester LE1 4DH
Tel: 0116 253 6333. Fax: 0116 251 4709

Leicestershire

Published 1886

Source map scale - 1:2,500

The historical maps shown were reproduced from maps predominantly held at the scale adopted for England, Wales and Scotland in the 1840's. In 1854 the 1:2,500 scale was adopted for mapping urban areas and by 1896 it covered the whole of what were considered to be the cultivated parts of Great Britain. The published date given below is often some years later than the surveyed date. Before 1938, all OS maps were based on the Cassini Projection, with independent surveys of a single county or group of counties, giving rise to significant inaccuracies in outlying areas.

Map Name(s) and Date(s)

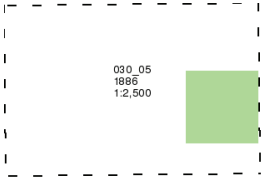

Historical Map - Segment A13

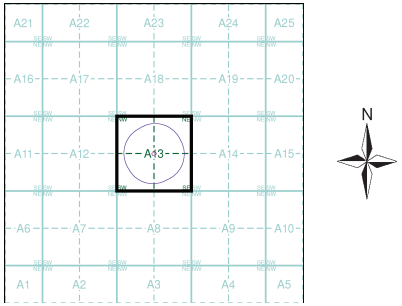

Order Details

Order Number:	34008336_1_1
Customer Ref:	G11037
National Grid Reference:	446700, 306330
Slice:	A
Site Area (Ha):	0.11
Search Buffer (m):	250

Site Details

8 Merrylees Industrial Estate, Leeside, Desford, LEICESTER, LE9 9FS

Landmark Information Group
Tel: 0844 844 9952
Fax: 0844 844 9951
Web: www.envirocheck.co.uk

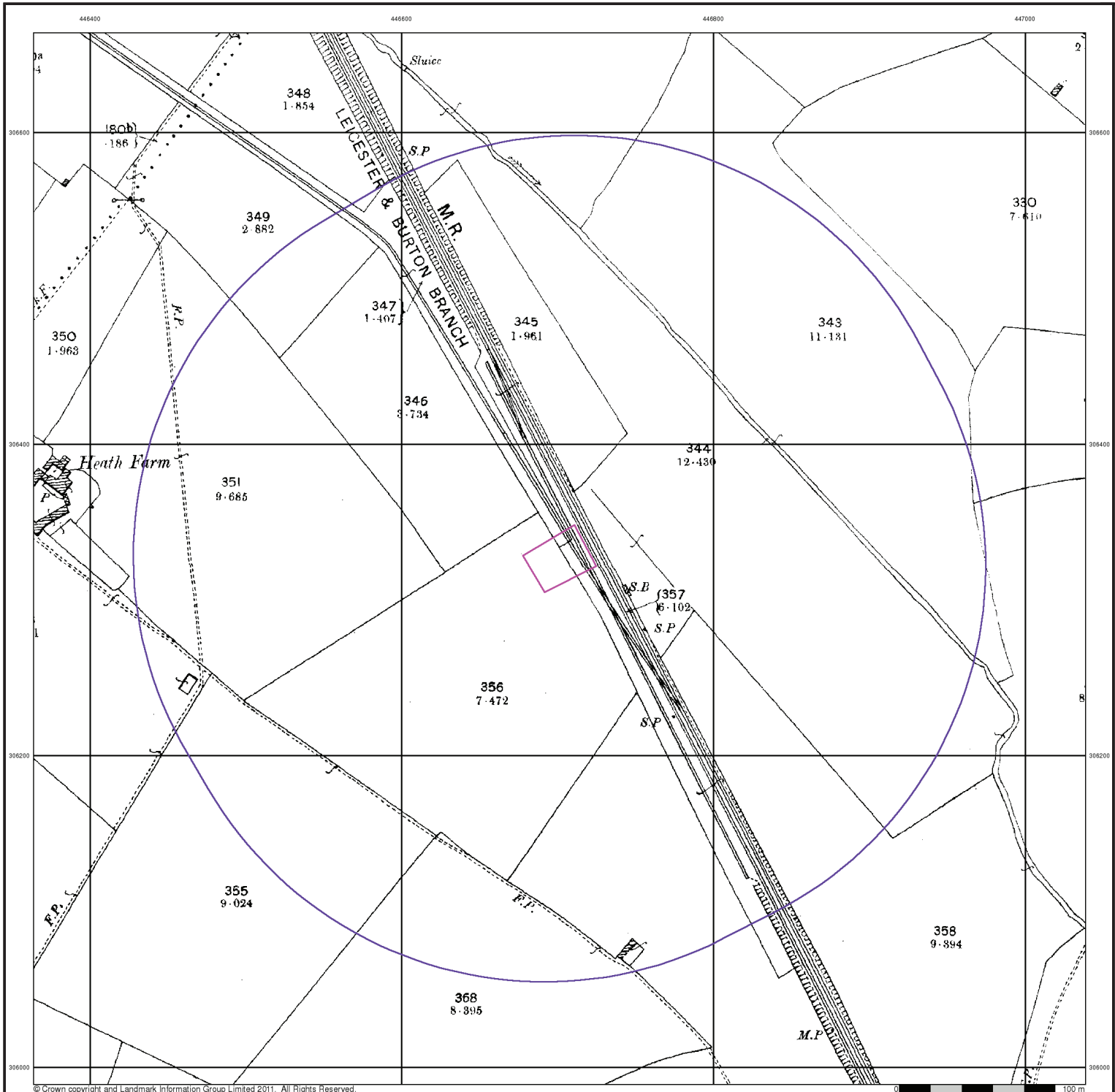

© Crown copyright and Landmark Information Group Limited 2011. All Rights Reserved.

Nicholls Colton
GEOTECHNICAL
7-11 Harding Street, Leicester LE1 4DH
Tel: 0116 253 6333. Fax: 0116 251 4709

Leicestershire

Published 1903

Source map scale - 1:2,500

The historical maps shown were reproduced from maps predominantly held at the scale adopted for England, Wales and Scotland in the 1840's. In 1854 the 1:2,500 scale was adopted for mapping urban areas and by 1896 it covered the whole of what were considered to be the cultivated parts of Great Britain. The published date given below is often some years later than the surveyed date. Before 1938, all OS maps were based on the Cassini Projection, with independent surveys of a single county or group of counties, giving rise to significant inaccuracies in outlying areas.

Map Name(s) and Date(s)

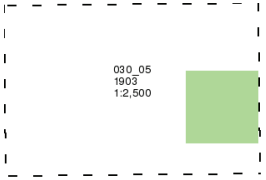

Historical Map - Segment A13

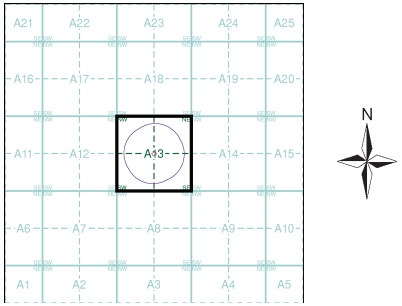

Order Details

Order Number:	34008336_1_1
Customer Ref:	G11037
National Grid Reference:	446700, 306330
Slice:	A
Site Area (Ha):	0.11
Search Buffer (m):	250

Site Details

8 Merrylees Industrial Estate, Leeside, Desford, LEICESTER, LE9 9FS

Landmark Information Group
Tel: 0844 844 9952
Fax: 0844 844 9951
Web: www.envirocheck.co.uk