09/00675/FUL

Revision	Date

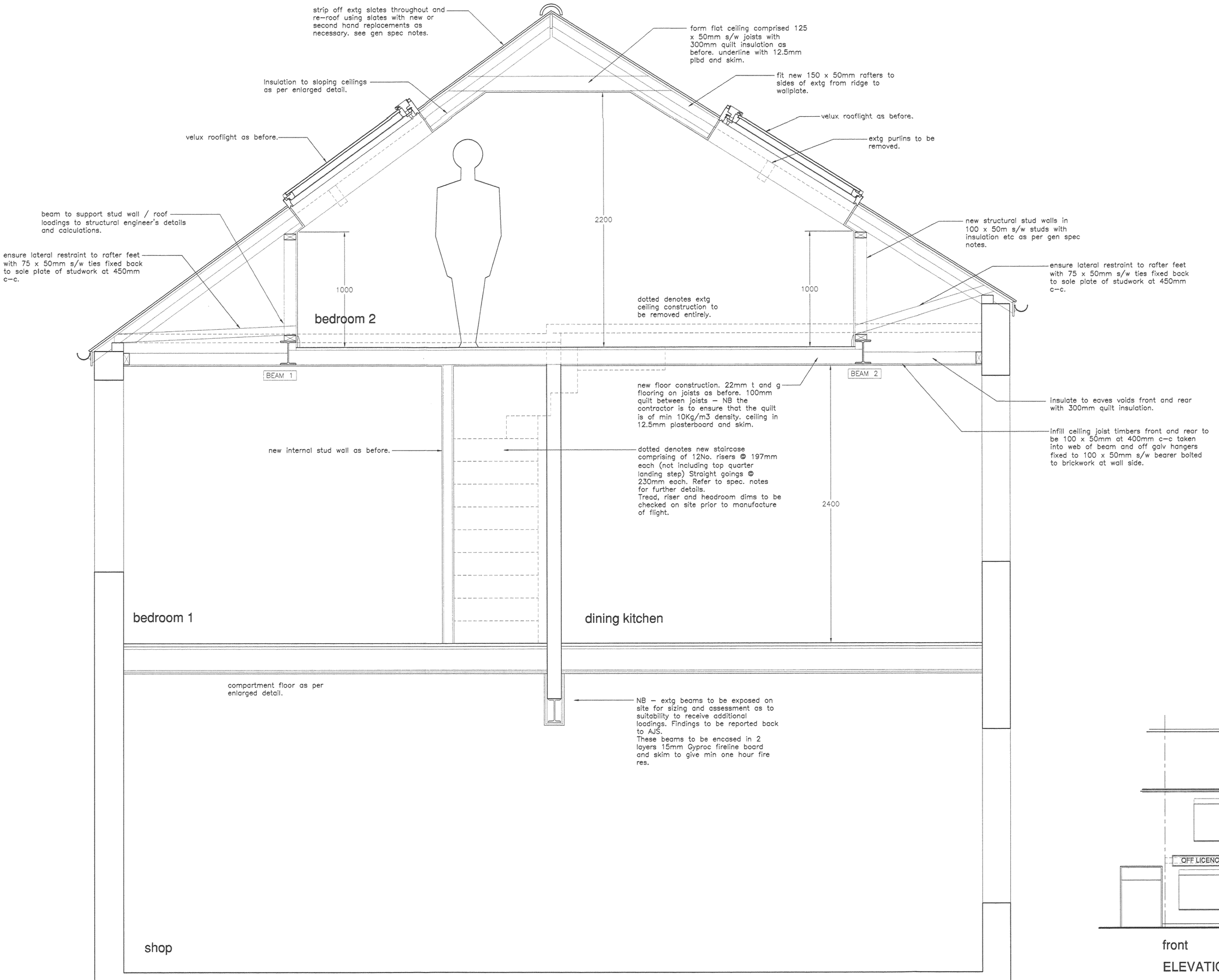

SECTION THRO` BUILDING AS PROPOSED 1:20

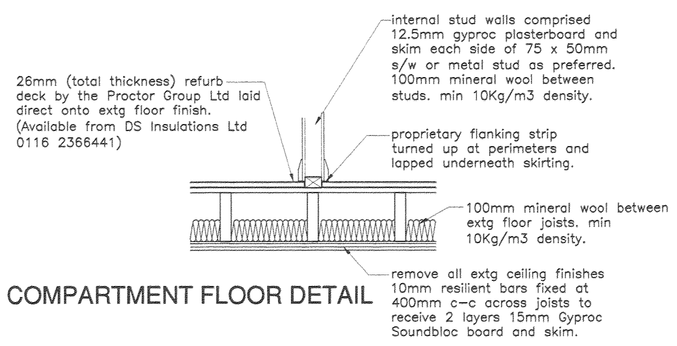

COMPARTMENT FLOOR DETAIL

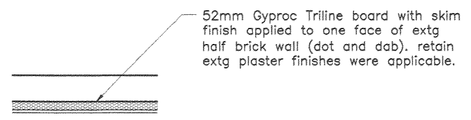

COMPARTMENT WALL DETAIL (EXTG RETAINED SOLID WALLS)

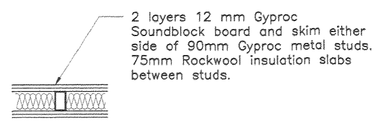

COMPARTMENT STUD WALL DETAIL

GENERAL SPECIFICATION NOTES (SECOND FLOOR)

NEW FLOORS
new second floor construction as follows: 22mm flooring grade chipboard or floorboard finish as preferred by client (T & G jointed) on softwood joist system at size and centres as noted on the joist plan (NB all structural timbers to be strength class SC3/C16 and to BS5268 part 2 unless otherwise specified. Any structural steelwork to be to structural engineer's design and calculations, with padstones etc as necessary. Joists to bear off Trimmer beams/loadbearing walls/galvanised hangers as indicated on section and joist plan. Softwood strutting to be provided to mid span points of any joists spanning in excess of 2.5m. double up floor joists where trimming around stairwell and underneath any full height partitions. Provide 100mm quilt insulation between new floor joists of 10Kg/m3 density for acoustic puposes. to be finished with 12.5mm Gyproc fireline plasterboard and skim.

STAIRS
New staircase where indicated comprised treads and risers at sizes as indicated on plan. Any winding treads to be min 50mm measured across narrowest point. max pitch of stair to be 42 degrees. Staircase width as indicated on plan. Ensure min 2m clear headroom above pitch line of stair. (NB where the staircase is situated beneath a sloping ceiling, the min required headroom can be reduced to 1.9m measured vertically from the centre of the stair and 1.8m from the side to the ceiling springing point. Handrail to be fixed at min 900mm above the pitch line of the flight and 1000mm to landings/stairwells. Any vertical balusters to be spaced so that a sphere of 100mm dia will not pass between.
staircase enclosure and underside of stair to be faced each side with 12.5mm plasterboard and skim to give min half hour fire res between second third storeys.

INSULATION/PLASTER
sloping ceilings to be insulated as follows: Celotex sheet insulation fitted as detailed on 1:20 section and in accordance with manufacturer's instructions. All to give min U value of 0.2W/m2K. underdraw extg or new rafters with 12.5mm Gyproc plasterboard and skim. Construct vertical stud walls to eaves as indicated on section comprised 100 x 50mm studs at 450mm centres with head and sole plates. 100mm Celotex or equal insulation secured between studs. Studwork faced on room side with 12.5mm plasterboard and skim.
Party / gable walls to be drylined with battens / Celotex as indicated on plan. Face on room side with 12.5mm plasterboard and skim.
Flat sections of ceiling at eaves to have equivalent of min 300mm quilt insulation to give min U value of 0.16W/M2C. (NB ensure that this insulation consists of at least one layer of 100mm at min 10Kg/m3 density)

WINDOWS
All new roof windows to be Velux rooflights unless specified otherwise. All to be fitted in strict accordance with manufacturer's instructions. Existing or new rafters to be doubled up to trim openings. rooflights to be double glazed as standard and to give min 8000mm2 controllable background ventilation. Velux windows generally to be type GHL top hung type at sizes as indicated on the drawing.
NB all new windows to have a soft low E coating and to have a U value not exceeding 1.8W/m2C

VENTILATION
provide adequate crossflow of air to all insulated roof spaces as follows: ensure min 50mm air gap above all insulation as before. suitability of existing eaves ventilation to be assessed on site with local authority building inspector. The contractor is to allow for the provision of new proprietary 10mm continuous eaves ventilation system if necessary (to both sides) ventilate to upper section of roofspace with proprietary ridge ventilation system or equal approved.
NB where the property is to be reroofed in conjunction with the work then the use of "Roofshield" or "Tyvek Supra" breathable roofing felt will negate the need for the above ventilation requirements.

GENERAL SPECIFICATION NOTES

WALLS
All internal wall treatments, extg brick partitions, new stud and compartment walls to be as indicated on enlarged details.

OPENINGS
ANY new lintols to new internal door openings etc are to be generally 2crs deep pre-stressed conc lintols by Stressline or equal.

COMPARTMENT FLOORS
Extg timber first floor between new flat and shop to have sound insulation / fire resistance treatment as noted on enlarged detail. All extg plaster finishes to be removed prior to fixing of new system.

WINDOWS
Existing windows to be replaced in white UPVC frames where necessary with sealed double glazed units having a U value not exceeding 1.8 W/m2K. Frames to incorporate trickle vents to acheive background ventilation of 8000mm2 to habitable rooms. Ensure opening lights equal 5% of the floor area. Provide draught seals to all windows, doors and rooflights. Safety glazing to BS6206 to windows less than 800mm and doors / sidelights less than 1500mm from finished floor level. Minimum 500 x 850mm opening lights to first floor windows.

STAIRS (EXISTING)

The existing staircase to serve the first floor flat where compartment situation occurs, is to have 2 layers 15mm soundblock board and skim fixed to soffit.

STEELWORK
All new steelwork as indicated to Structural Engineers details and calculations. 2 courses minimum Class A engineering brickwork as padstones unless otherwise noted, 2 Layers of 12.5mm Fireline plasterboard & skim with wire binding at 100mm cts. to provide minimum half hours fire protection.

HEATING
Heating to be by gas fired condensing boiler with balanced flue. The boiler is to have a SEDBUK efficiency rating of 86%. The system to incorporate zone controls via thermostatic radiator valves and boiler to incorporate timing device, interlock facilities and flow control to prevent unnecessary boiler cycling.
All pipe and duct-work should be insulated in accordance with the requirements of BS 5422.

SMOKE ALARMS
Smoke alarms where indicated to be inter - connected and mains wired with emergency battery back up supply. To be minimum 300mm from electrical fittings and maximum 3 metres from any adjacent bedroom door.
All to comply with BS5446 Part 1.

VENTILATION
Background ventilation to habitable rooms to be equivalent to 8000mm2. (4000mm2 to kitchen and bathroom)
Mechanical ventilation to be equivalent to:-
60 litres / second kitchen
30 litres / second to bathrooms
NB ensure 10mm undercuts to door.

PLUMBING
Any replacement rainwater goods to be black PVCu Marley or similar with 70mm dia. downpipes. New waste connections to air admittance valves having rodding eye and access point at base.
Sink, bath/shower:- 40mm waste and 76mm trap
Wash basin:- 32mm waste and 76mm trap
WC and cistern:- 100mm branch connection
Re-sealing traps where length of run exceeds 3m. Head of drainage run to be vented via new soil and vent pipe, minimum 900mm above any adjacent openings.

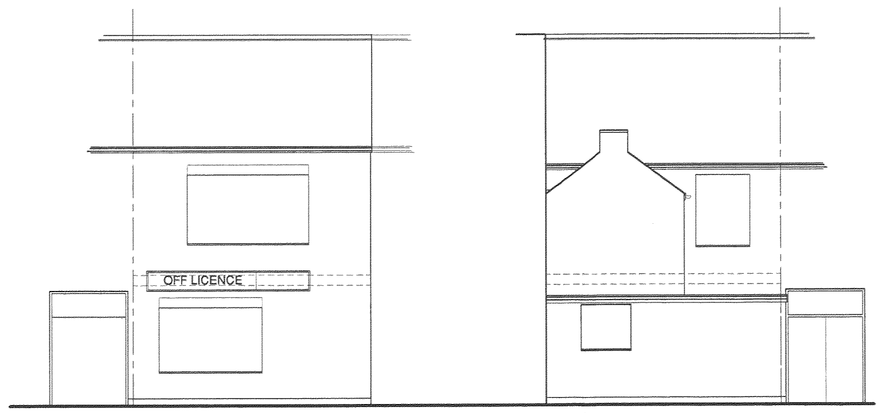

front rear

ELEVATIONS AS EXISTING 1:100

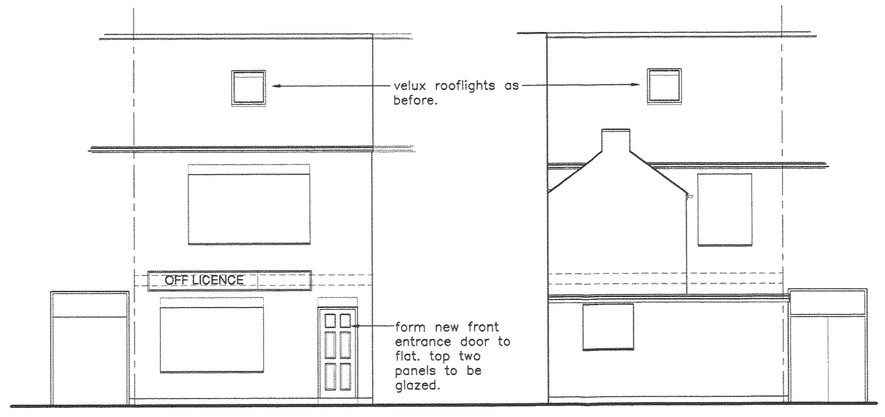

front rear

ELEVATIONS AS PROPOSED 1:100

DEVELOPMENT SERVICES
26 AUG 2009
RECEIVED

A.J.S
ARCHITECTURAL DESIGN

Please reply to:
130 Wyngate Drive
Leicester
LE3 0UT
Tel: 0116 254 1447
Mobile: 07974 263607
Fax: 0116 254 1447
Email: andyaskeyeds@aol.com

Offices also at
8 Belvoir Close
Mountsorrel
Leicester LE12 7BL
Tel: 0116 230 2806

108 Haddenham Road
Leicester
LE3 2BG
Tel: 0116 229 0856

Project *PROPOSED FLAT CONVERSION ABOVE SHOP PREMISES AT 88 STATION ROAD, RATBY, LEICESTER. FOR: MR. & MRS MOORE*

Sheet Title *SECTIONS AND ELEVATIONS EXISTING AND PROPOSED*

Scale *1:50, 1:100* Ref *2009/823/02*

Date *JULY 2009* Drawn *AJA*

ALL DIMENSIONS TO BE CHECKED ON SITE. DO NOT SCALE OFF DRAWING.
THIS DRAWING IS THE COPYRIGHT OF THE ARCHITECT AND NOT TO BE REPRODUCED WITHOUT THEIR PERMISSION. ORDNANCE SURVEY MAP INFORMATION REPRODUCED WITH PERMISSION OF HMSO CROWN COPYRIGHT RESERVED.