11/00455/CON + 11/00731/FUL DISCONS

JB





LUMINAIRE SCHEDULE

Symbol	Label	Qty	Catalog Number	Description	Lamp	Lumens	LLF
	XA	4	1 x ASM.100CDMT3.FWC	AERIS MEDIUM FORWARD THROW CUTOFF	100W CLEAR CDM-T 3000K METAL HALIDE (E27)	9000	0.93
	XB	2	ASM.100CDMT3.NR	AERIS MEDIUM LONG AND NARROW	100W CLEAR CDM-T 3000K METAL HALIDE (E27)	9000	0.93
	XC	3	DEB.70CDMTF3.LYA.TR	DENVER ELITE BOLLARD	70W CLEAR CDM-T 3000K METAL HALIDE (G12)	6200	0.90
	XD	7	DEB.70CDMTF3.LYA.DO	DENVER ELITE BOLLARD	70W CLEAR CDM-T 3000K METAL HALIDE (G12)	6200	0.90

STATISTICS

Description	Symbol	Avg	Min	Min/Avg
Car Park - Residential	+	7 lux	0 lux	0.00
Car Park - Store	+	20 lux	5 lux	0.25
Overspill	+	0 lux	0 lux	N / A

LUMINAIRE LOCATIONS

No.	Label	MH	Tilt
1	XA	5.0	0.0
2	XA	5.0	0.0
3	XA	5.0	0.0
4	XB	5.0	0.0
5	XB	5.0	0.0
6	XA	5.0	0.0
7	XC	1.0	0.0
8	XD	1.0	0.0
9	XD	1.0	0.0
10	XC	1.0	0.0
11	XD	1.0	0.0
12	XD	1.0	0.0
13	XD	1.0	0.0
14	XD	1.0	0.0
15	XC	1.0	0.0
16	XD	1.0	0.0

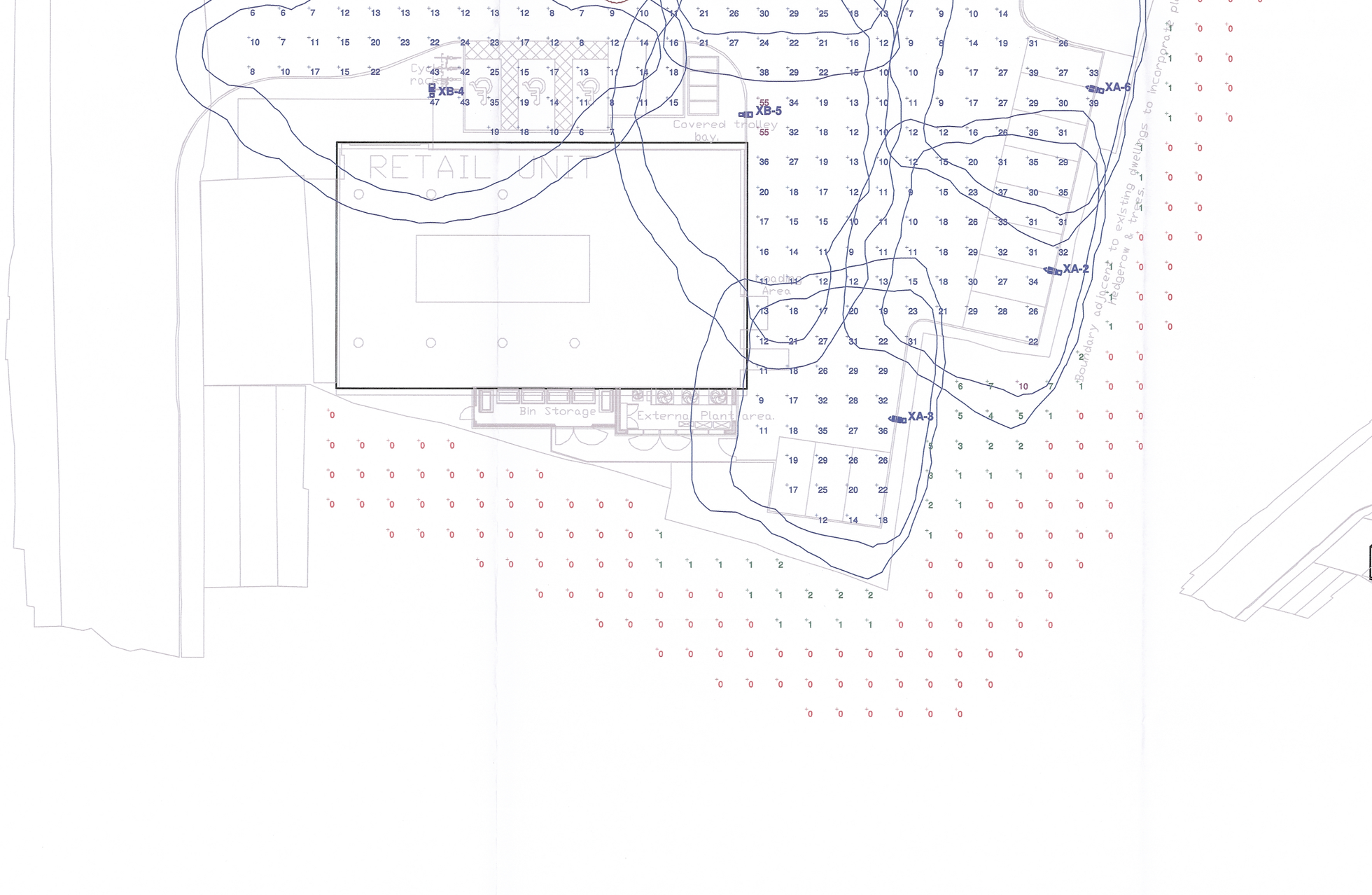

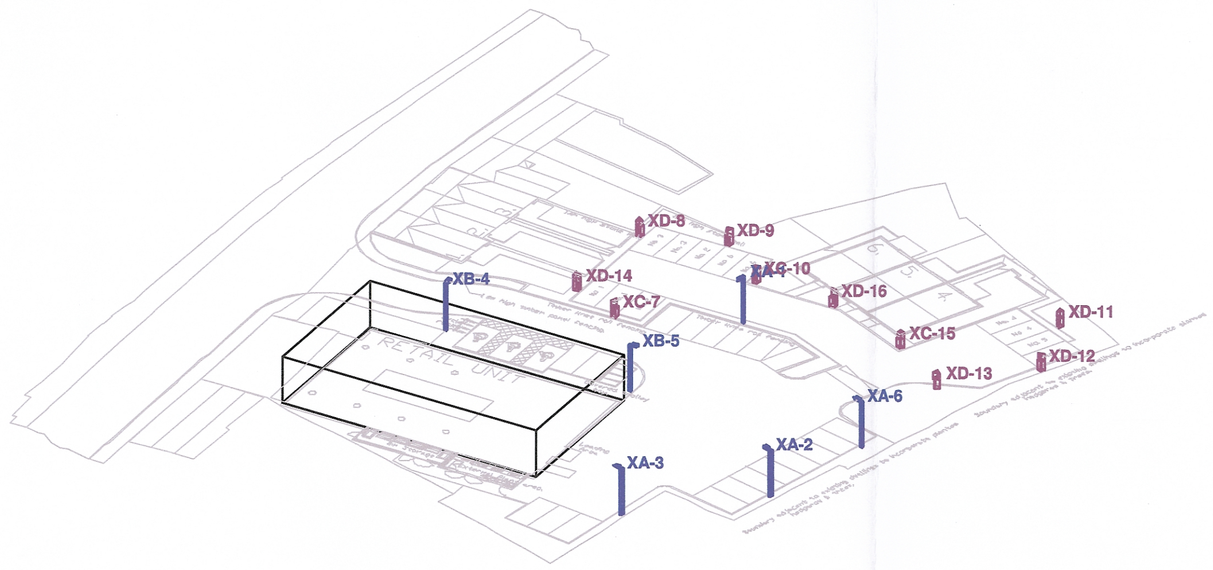

HOLOPHANE
LEADER IN LIGHTING SOLUTIONS
experience lighting's best.

Co-Op Markfield

Designer
R Huxley

Date
Jun 26 2012

Scale
1:200 @ A1

Drawing No.
P109-2098-A