[redacted]

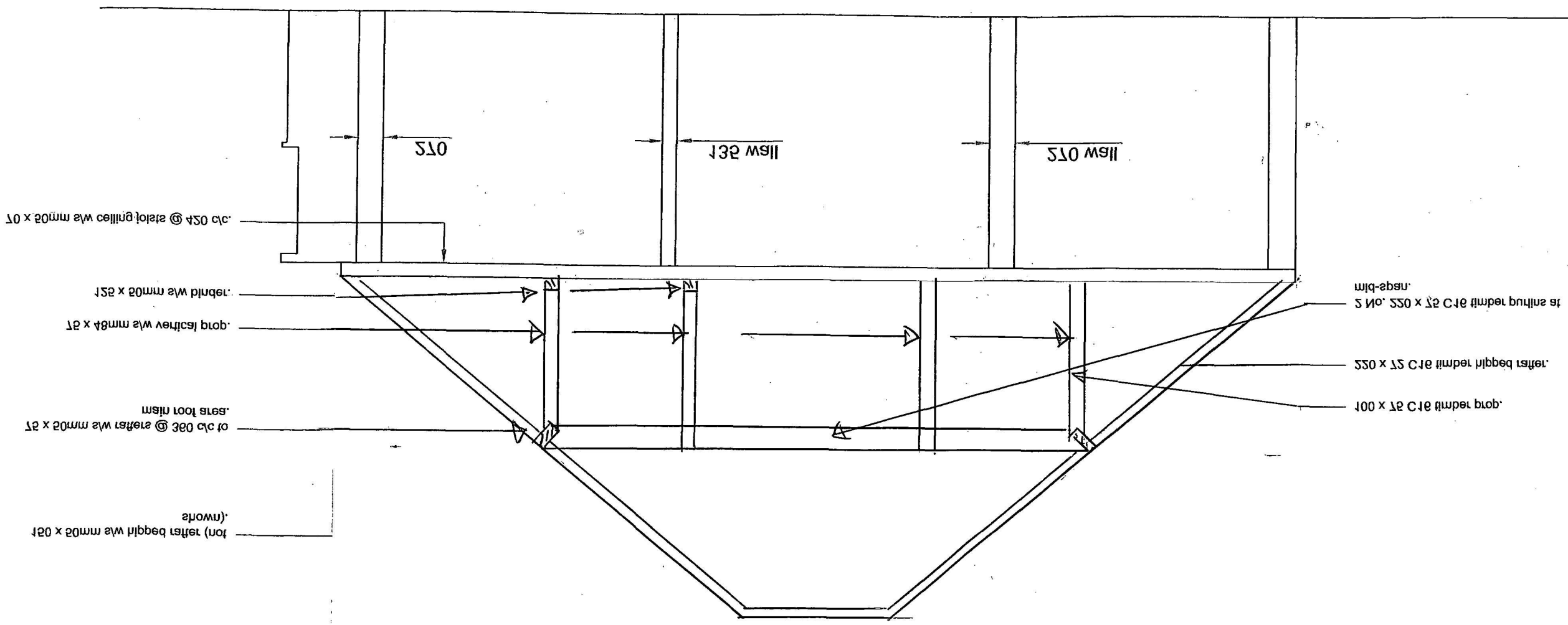

Proposed Section A-A

Don Merch

Drawing

Warwickshire CV13 6HN
Nuneaton
Stoke Golding
35 Wykin Lane

Project

Mr D Waring

Client

Amendment

Revisions

RECEIVED
5 MAR 2002
SERVICES
DEVELOPMENT

Notes