DETAILS ARE PRODUCED FOR LOCAL AUTHORITY APPROVAL ONLY. BUILDER MUST CHECK ALL DETAILS BEFORE COMMENCING WORK.
SUITABLE TEMPORARY SUPPORTS MUST BE ARRANGED BEFORE REMOVAL OF ANY WALLS.

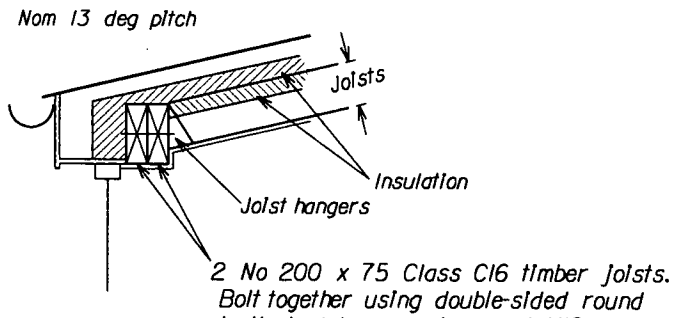

Enlarged Detail

Typical detail over Window and French Doors

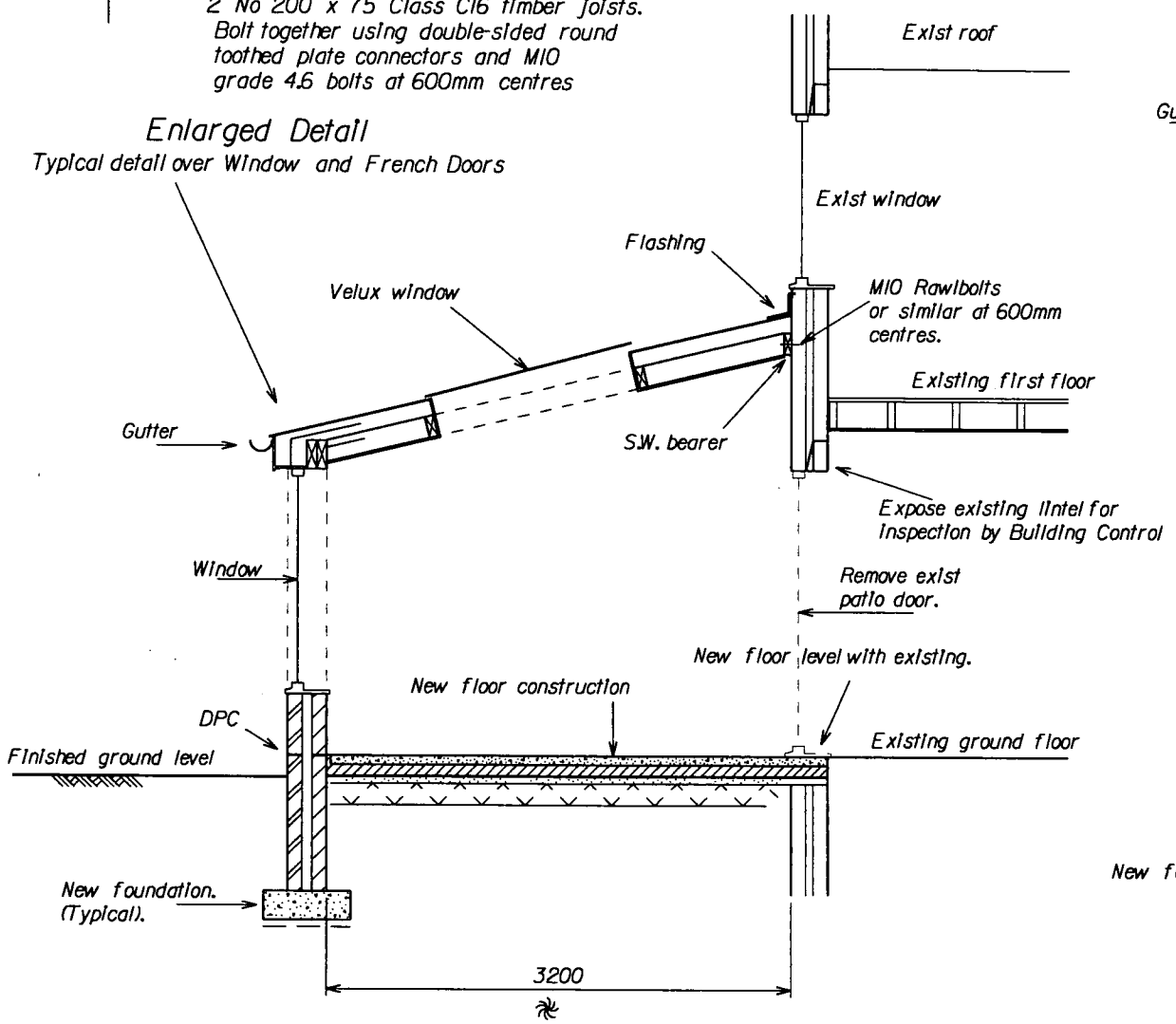

Section A - A

BUILDER MUST CHECK SETTING OUT
BEFORE COMMENCING WORK.

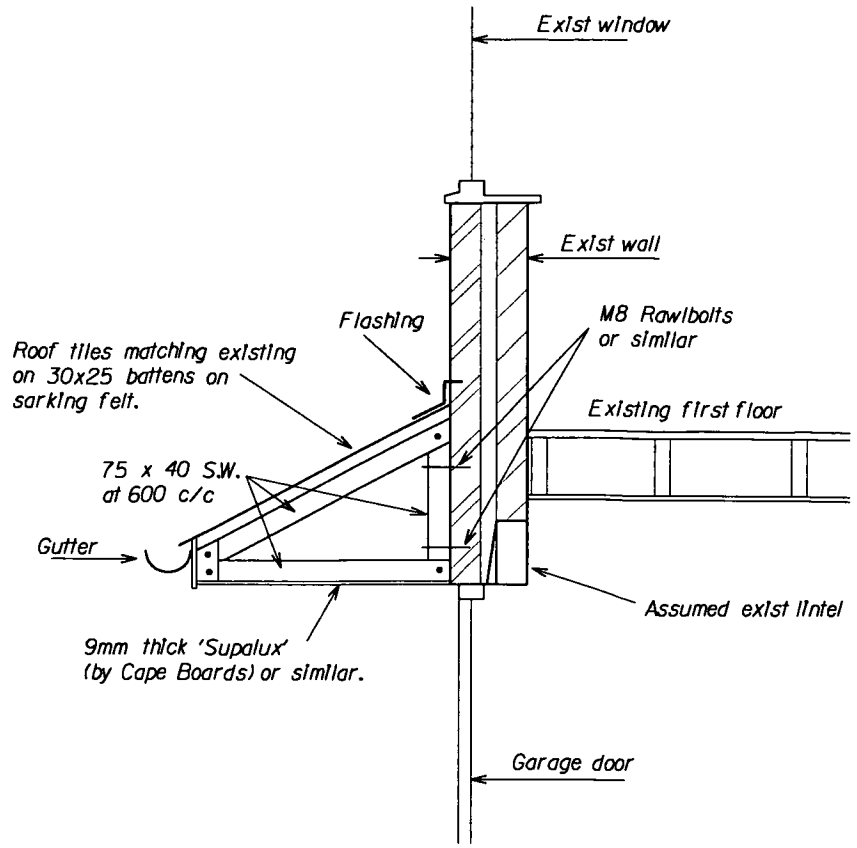

Section B - B

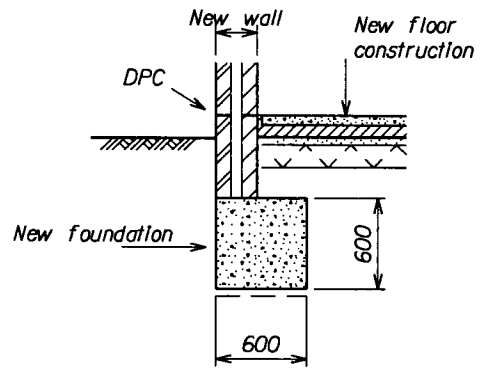

Boundary Wall
Foundation

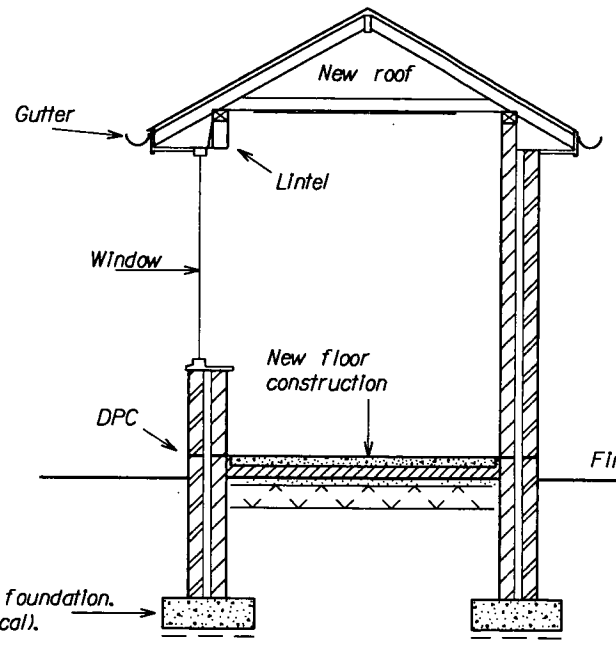

Section C - C

ROOF CONSTRUCTION (Section C-C) 'U' value 0.16 w/sq m
Roof tiles matching existing roof on 38 x 25 treated S.W. battens on sarking felt to BS 747
on 40 x 75 S.W. rafters and joists at max 600mm centres on 75 x 100 S.W. wallplate.
Roof strapped with galvanised M.S. anchors; vertical restraint 2.5mm x 30mm at 2m
centres, horizontal restraint 5mm x 30mm at 2m centres, anchors fixed to walls minimum
900mm below wallplate. Ventilate eaves with equivalent of continuous 10mm gap.
High level ventilation (ventilation tiles or other) equivelant to 5mm continuous gap.
Roof insulation to be Rockwool Rollbats - 100mm thick laid between joists and 150mm thick
laid across joists.
Ceiling - 13mm thick plasterboard, finish with 5mm thick Gypsum plaster.

RECEIVED
24 AUG 2009
DEVELOPMENT
SERVICES

Proposed Alterations at 45 Seaforth Drive, Hinckley, LE10 0XJ

Scale 1:50

Drawing No 3