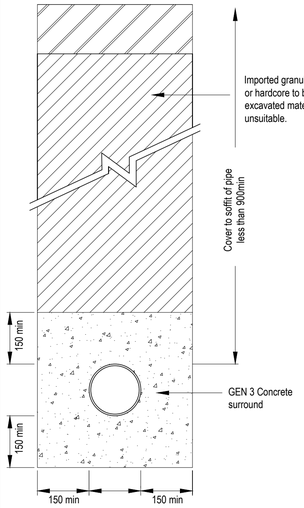

CLASS Z - Bedding Factor 2.6
For pipes under Private Roads with less than 1200mm cover
NOT TO SCALE

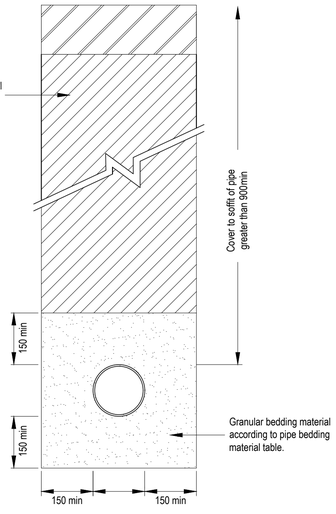

CLASS S - Bedding Factor 2.2
Granular bed and surround
For pipes under Private Roads with greater than 1200mm cover
NOT TO SCALE

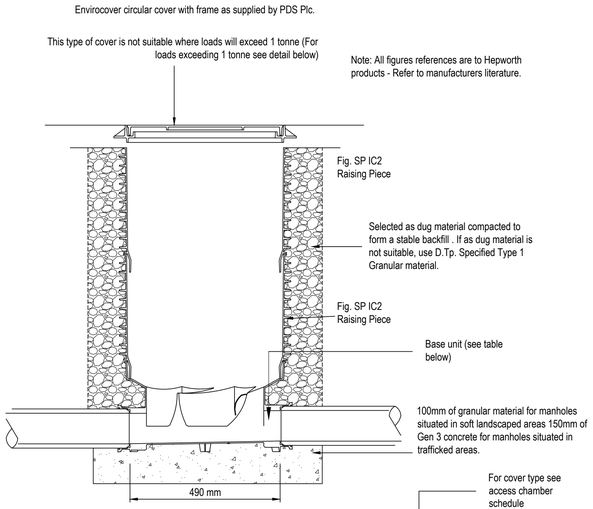

Note: All figures references are to Hepworth products - Refer to manufacturers literature.

Pre-formed benching connection points as per table below

Base unit type	Pipe size	No of connections
SP IC1/1	100Ø	6
SP IC1/2	100Ø	6
SP IC2/1	150Ø	4

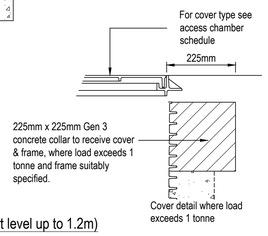

PPIC
(Depth from cover level to invert level up to 1.2m)
scale 1:10

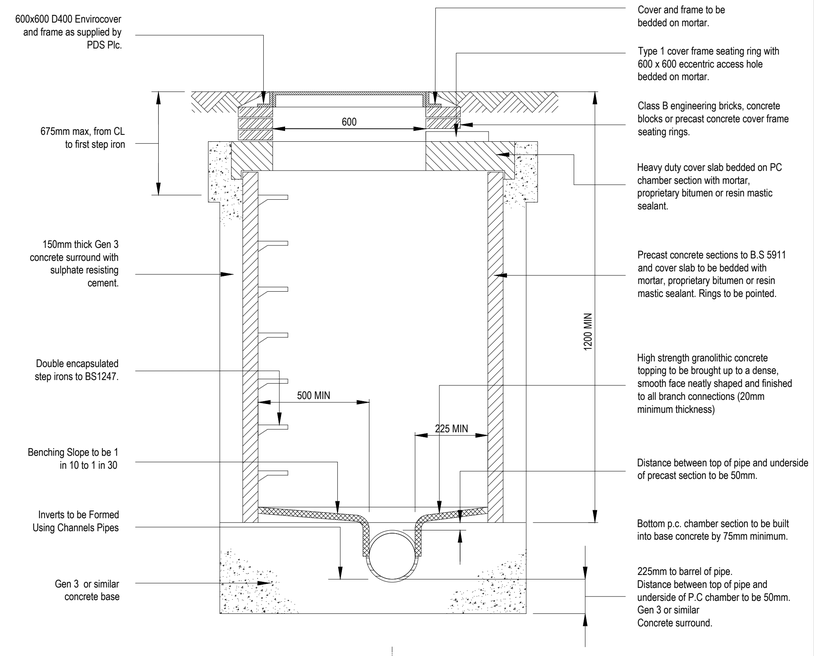

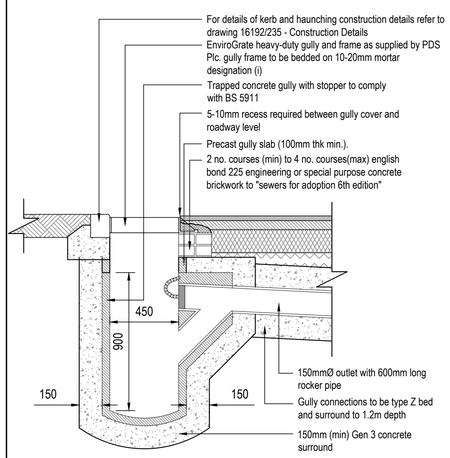

Gully Notes
1. Excavations around gullies to be backfilled with class 1 material as described in table 6/1 and compacted as described in compliance with clause 612. Where mechanical compaction is impractical, or where adjacent to pedestrian crossings or within car parking areas. the excavation is to be backfilled with grade Gen 3 concrete
2. 'Pedestrian' gratings to be used in all pedestrianised areas
3. Desirable minimum gradient of outlet to be 1:10

Precast Concrete Road Gully
scale 1:20

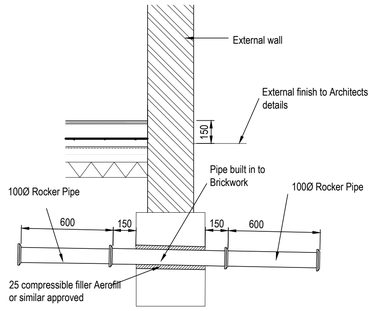

Pipe passing through wall using rocker pipes
Scale 1:20

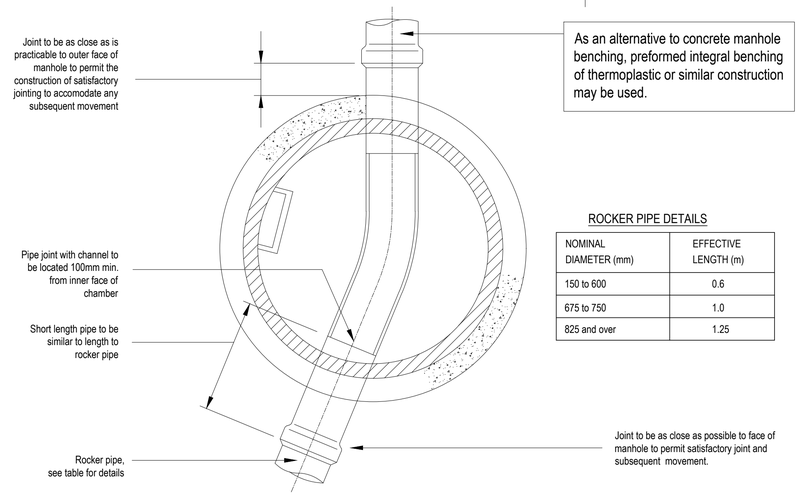

As an alternative to concrete manhole benching, preformed integral benching of thermoplastic or similar construction may be used.

ROCKER PIPE DETAILS

NOMINAL DIAMETER (mm)	EFFECTIVE LENGTH (m)
150 to 600	0.6
675 to 750	1.0
825 and over	1.25

Typical Manhole Detail
Max depth from cover level to soffit of pipe 3.0m
NOT TO SCALE

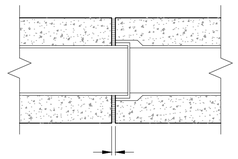

COMPRESSIBLE FILLER BOARD
18mm FOR PIPES UP TO 450 DIA 36mm FOR PIPES 450 TO 1200 DIA

Pipe Joint Detail
Type Z Surround
scale 1:20

Pipe bedding material table

Nominal Pipe Diameter (mm)	BS 882: 1992 Course Aggregate (Table 3)	
	Graded Aggregate Ranges (mm)	Single Sized Aggregate Sizes (mm)
110mm	14 - 5	10
160mm	20 to 5 or 14 to 5	10 or 14
Exceeding 200	14 to 5, 20 to 5	10,14, or 20

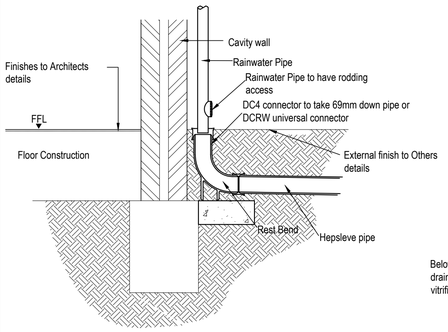

Typical Rainwater Pipe
Scale: 1:20

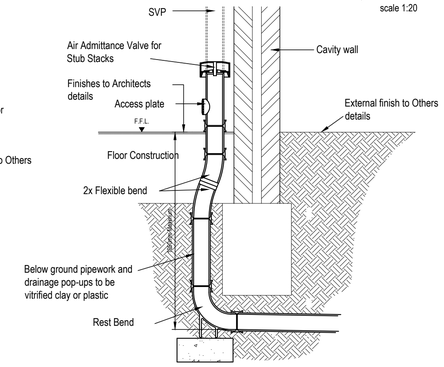

Typical Soil and Vent Pipe and Stub Stack Detail
Scale: 1:20

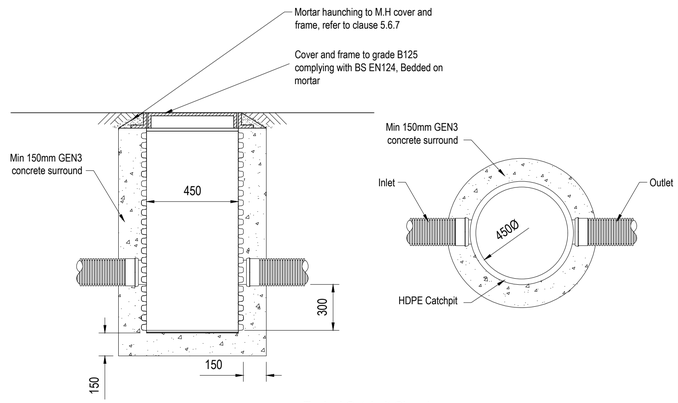

Typical Catchpit Chamber
(Scale 1:20)

CDM Regulations:
The reader is notified that CDM regulations may apply to the contract, and that appropriate Health & Safety Risk Assessments and Method Statements will be needed to comply with the Regulations where applicable.

It is the Client's responsibility to make suitable arrangements for managing their project, enabling those carrying it out to manage health and safety risks in a proportionate way.

It is the Client's responsibility in appointing (IN WRITING) as soon as possible, appropriately experienced Contractors and Designers to the project (Including the Principal Designer and Principal Contractor) to carry out tasks as required under the Contract.
Further guidance on CDM Regulations can be obtained from the Health & Safety Executives website: www.hse.gov.uk/cis41.pdf.

Notes:

Rev:	Date:	Comments:	By:
P01	18/11/25	Preliminary Issue	CLN

GMB Consultancy
Structural Engineering Consultants

GMB Consultancy
16 Commerce Square, Lace Market
Nottingham, NG1 1HS
+44 (0) 7341 220346
gmb@gmbconsultancy.co.uk gmbconsultancy.co.uk

Client:
XL DESIGNS (MIDLANDS) LTD

Project:
LAND AT LINDRIDGE LANE
DESFORD, LEICESTERSHIRE

Title:
DRAINAGE DETAILS 1 OF 2

Sheet Size: A1	Status: PRELIMINARY	Date: 18.11.25
Drawn By: CN	Checked By: GMB	Scale: AS SHOWN

Drawing No: 25808-GMB-XX-XX-DR-C-0145
Revision: P01

This drawing contains confidential information of GMB Consultancy. ("The Company") and the copyright, design right and/ or other intellectual property rights in the drawing belong to The Company. All rights conferred by the law and by virtue of international copyright and other conventions are recovered to the company. This drawing and the information contained therein or any part thereof must not be reproduced, disclosed or used for purposes other than those for which prior written consent of The Company has been given.