Station Road
Bagworth

Arboricultural Method Assessment

June 2026
12841_AMS.001

Project Details	
Client:	A R Cartwright Limited
Project:	Station Road, Bagworth
Report Title:	Arboricultural Method Statement
Project Number:	12158
File Reference:	12158_AMS.001
Date:	22/06/2026

Copyright

The copyright of this document remains with Aspect Arboriculture Ltd. All rights reserved. The contents of this document therefore must not be copied or reproduced in whole or in part for any purpose without the written consent of Aspect Arboriculture Ltd.

Limitations

This assessment has been prepared in respect of the proposed development and should not be interpreted as a report on tree health and safety. Reasonable effort has been made to identify visible defects whilst undertaking the tree survey; trees are however, prone to natural failure without warning therefore no guarantee can be made as to the absolute safety of any of the trees surveyed. Aspect's opinion of tree condition and structural potential is therefore valid for a limited period of 12 months from the date of inspection. Validity is assumed in the absence of inclement weather and no change to the trees' existing context. Reliance should not be given to comments made in respect of other disciplines i.e. landscape, ecology or civil engineering without first consulting an appropriate expert.

Liability

This report has been prepared for the exclusive use of the commissioning client and unless otherwise agreed in writing by Aspect Arboriculture Ltd. no other party may use, or rely on the contents of the report. No liability is accepted by Aspect Arboriculture Ltd. for any use of this report, other than for the purposes for which it was originally prepared and provided. No warranty, express or implied, is made as to the advice in this report. The content of this report is partly based on information provided by third parties. Unless otherwise stated, information obtained from any third party has not been independently verified by Aspect Arboriculture Ltd.

Contact Details

Aspect Arboriculture Ltd.
Hardwick Business Park I Noral Way I Banbury I Oxfordshire I OX16 2AF
t 01295 276066 f 01295 265072 e info@aspect-arbor.com
w www.aspect-arbor.com

Contents

Text:

1 Introduction 3

1.1 Background 3
1.2 Statutory Designations 3
1.3 Scope 3
1.4 Limitations 3

2 Essential Works 4

2.1 Tree Protection Plan 4
2.2 Tree Removals 4
2.3 Pruning Works 5
2.4 Protective Barriers 5
2.5 New Hard Surfacing 5
2.6 Proposed Order of Works 7
2.7 Site Managers Point of Contact for Arboricultural Input 7

3 Conclusions 8

Tables:

Table 1. Tree Removals by BS5837:2012 Category.

Appendices:

Appendix A: Tree Protection Plan (12158 TPP 01)
Appendix B: Works Auditing Schedule (12158 WAS 01)
Appendix C: Tree Survey Schedule (12158 TS 01)
Appendix D: Barrier Specifications

1 Introduction

1.1 Background

1.1.1 Aspect Arboriculture are commissioned by A R Cartwright Limited to prepare an Arboricultural Method Statement and Tree Protection Plan (hereafter the AMS and TPP) to inform proposals for the development of land at Station Road, Bagworth. The proposals seek 'Full Planning Permission for the Erection of 46 Dwellings, Formation of Access, Associated Landscaping and Attenuation Pond', and are logged with Hinckley and Bosworth Borough Council under application 25/00990/FUL.

1.1.2 The AMS will be submitted to, and approved by, Hinckley and Bosworth Borough Council, prior to the commencement of construction works occurring on site. Once approved, the safeguarding measures and works should be implemented as specified and maintained to the Council's satisfaction until completion of development works.

1.1.3 The confident protection of retained trees will be achieved through the use of the appended Tree Protection Plan (appendix A) and Works Auditing Schedule (appendix B), alongside other supporting documents included within appendices C and D.

1.2 Statutory Designations

1.2.1 Background checks have confirmed that the application area does not occur within a Conservation Area and that there are no protected trees within influence of the site (Hinckley and Bosworth Borough, cited June 2026).

1.3 Scope

1.3.1 This work relates to arboriculture therefore reliance should not be given to comments made in respect of other disciplines i.e. civil engineering or construction phasing, without first referencing an appropriate expert.

1.4 Limitations

1.4.1 The document has been prepared to inform safeguarding measures during development and should not be interpreted as a report on tree health and safety. Reasonable effort has been made to identify visible defects whilst carrying out the tree survey, however trees are prone to natural failure without warning; no guarantee can be made as to the absolute safety of any of the trees surveyed.

1.4.2 Aspect's opinion of tree condition and structural potential is valid for limited period from the date of survey. Validity is assumed in the absence of inclement weather and no change to the tree's existing context. A copy of the site's tree survey information is provided within appendix C.

2 Essential Works

2.1 Tree Protection Plan

2.1.1 The Tree Protection Plan (TPP) provided in appendix A will be relied upon during construction of the development. It must be read in conjunction with the entirety of this document.

2.1.2 To prevent avoidable damage occurring to retained trees or erroneous tree loss, a scaled A1 copy of the TPP, accompanied by a copy of this document will be provided to the Site Manager. This will ensure they are able to:

- Clearly identify all retained trees;
- Identify the correct locations for tree protection barriers;
- Identify features of the site that must be prepared/installed under an arboricultural watching brief;
- Request attendance of the Project Arboriculturist on site for site monitoring and to provide advice in case of any emerging issues;
- Demonstrate compliance with the Council's consent for the development by safeguarding trees which are to be retained and enable the Project Arboriculturist to evidence this by completing the Works Auditing Schedule (appendix B).

2.2 Tree Removals

2.2.1 To implement the proposed development, it will be necessary to remove trees detailed within Table 1 below.

2.2.2 Table 1: Tree Removals by BS5837:2012 Category.

Category A	Category B	Category C
None	**T21** Purple Sycamore	**T19** Crack Willow
	T23 Silver Birch	**T22** Silver Birch
	T24 Sycamore	**G3+**
	T25 Silver Birch	**H3+Δ**
	T26 Silver Birch	
	T27 Silver Birch	
	T28 Silver Birch	

+ Denotes assemblage of three or more species (refer to appendix C)
Δ Denotes partial removal of tree group

2.2.3 Trees to be removed will be spray marked with a red flash by the project arboriculturist. The presence of the appointed arboricultural contractor, Site Manager and Arboricultural Officer are also recommended during this process to safeguard against erroneous felling.

2.2.4 Felling works should be timed to avoid the main nesting season for birds between 1st March and 31st August. If scheduled within this period an ecologist must be present to advise on any necessary protective measures, and to confirm that tree works are not likely to cause disturbance to nesting birds.

2.3 Pruning Works

2.3.1 It will not be necessary to prune any retained trees to accommodate the development proposal. It is however recommended that dead branches are removed from the canopies of the retained trees where oversailing areas of high use (within the applicant's control). This will help mitigate the risk of future tree related hazards emerging and associated apprehension.

2.3.2 Pruning works should be undertaken in accordance with section 7.3 (for removal of deadwood) of BS3998:2010, by a competent tree contractor. Works should also be timed to avoid the main nesting season for birds between 1st March and 31st August. If scheduled within this period an ecologist must be present to advise on any necessary protective measures, and to confirm that tree works are not likely to cause disturbance to nesting birds.

2.4 Protective Barriers

2.4.1 Tree protection barriers are required to safeguard retained trees from damage during construction works. Protective barriers must be installed before works commence as illustrated on the Tree Protection Plan provided at appendix A. The location for protective barriers has been informed by retained trees' canopy extents and root protection areas (RPA) and are shown within appendix A with a dark blue or dashed blue line.

2.4.2 It will be necessary to temporarily remove barriers to facilitate the construction of footpaths on the frontage of the site, within T32, T33, T34, T36 and T37's RPAs. This must only be carried out under arboricultural supervision with barriers reinstated upon completion of the works.

2.4.3 The Site Manager will be responsible for arranging attendance of the Project Arboriculturist, for the purpose of setting out barriers, and for their monitoring during the development; issues will be resolved on site and reported to the Council's Arboricultural Officer by the Project Arboriculturist.

2.5 New Hard Surfacing

2.5.1 To implement the development works, it will be necessary to introduce pedestrian footpaths to the front of the site within the RPAs of T32, T33, T34, T36 and T37. To avoid detriment occurring to trees T32, T33, T34, T36 and T37, the construction of new surfaces will be achieved by use of a raised construction detail and reliance on a Cellweb sub-base to prevent compaction, excavation and root severance. The location where a CellWeb sub-base must be utilised is illustrated within the TPP (appendix A) with a purple wash.

2.5.2 CellWeb must be installed manually under arboricultural supervision and adopt the following procedure:

a) The Project Arboriculturist will brief the installation team on the importance of preventing soil compaction, oxygen/moisture restriction and the need for any excavation work within RPAs which may incur unnecessary root severance.

b) Tree protection fencing and ground boarding must be installed prior to commencement.

c) Once installed, plant will only be permitted to enter the area once Cells have been laid and filled with angular stone.

d) To prevent migration of the infill material and future loss of structural integrity, the area receiving CellWeb must be covered with a porous geotextile underlay. This is to occur before installation of the cellular confinement system.

e) The cellular confinement system will be staked and expanded across the installation footprint area then cut to size. Up to 50mm of no fines bedding sand can be laid to create a level surface.

f) 4/20mm angular stone will be introduced by a lightweight dumper (1 tonne) tracking only over areas already filled with stone.

g) Edges are to be retained with non-invasive timber boards or set within a concrete footing poured into the last cell row of CellWeb. The concrete must be prevented from leaching by an impermeable membrane placed beneath the edge row of CellWeb.

h) Final wearing course to be installed as per the submitted hard and soft landscape detail.

2.5.3 To ensure confidence in the trees' tolerances towards the introduction of new surfacing and to overcome any existing compaction within the their RPAs, it is recommended that their full RPAs are treated with a decompaction treatment, incorporating a bio-stimulant injection, prior to the laying the CellWeb sub-base.

2.6 Proposed Order of Works

2.6.1 The following order of works must be followed:

i. Pre-commencement site meeting between the Project Arboriculturist, Site Manager and the Council's Arboricultural Officer. Stages of arboricultural auditing/monitoring requirements will be identified/agreed.

ii. Necessary tree removals and pruning to be carried out prior to installation of tree protection barriers and commencement of works in the vicinity.

iii. Tree protection barriers to be installed following removals and prior to works commencing in the vicinity. Upon request, barrier positions can be set-out by the Project Arboriculturist, as detailed within this document.

iv. The Council's Arboricultural Officer shall be informed of the proposed commencement date as soon as possible, to allow the inspection of protection measures.

v. The Site Manager will assume responsibility for arranging the attendance of the Project Arboriculturist to oversee, relocation of barriers and for the supervision of construction works within retained trees' RPAs, as detailed at within the Works Auditing Schedule (appendix B).

vi. The Site Manager will also assume responsibility for arranging attendance of the Project Arboriculturist for the monitoring of barriers at appropriate intervals for the duration of the development works. Erection of barriers and monitoring is included within the Works Auditing Schedule (appendix B).

2.7 Site Manager's Point of Contact for Arboricultural Input:

2.7.1 Patrick Haythornthwaite (Aspect Arboriculture)

Principal Arboricultural Consultant

Telephone: 01295 276066

Email: patrick.haythornthwaite@aspect-arbor.com

2.7.2 Justin Hodges (Aspect Arboriculture)

Arboricultural Consultant

Telephone: 01295 276066

Email: Justin.Hodges@aspect-arbor.com

3 Conclusions

3.1.1 This document has been prepared to inform the development of land at Station Road, Bagworth, logged with Hinckley and Bosworth Borough Council under application 25/00990/FUL. The document has been prepared to demonstrate how retained trees will be safely integrated as part of the scheme, informed by guidance provided in BS5837:2012 including details of the site's existing trees.

3.1.2 Pursuant to the instruction, this document and its supporting work (Appendices A - D) identifies all aspects of the proposals that must be managed to facilitate the confident protection of retained trees during construction.

3.1.3 To ensure confident tree retention, siting of tree protection barriers and the specified construction works must be audited by the Project Arboriculturist; the outcome of these works will be reported to the Council's Arboricultural Officer on completion. These elements are specified within the Works Auditing Schedule (appendix B).

3.1.4 It is Aspect's opinion that, subject to strict adherence to this document, the development can be implemented without incurring harm to retained trees.

APPENDICES

APPENDIX A

TREE PROTECTION PLAN (12158 TPP 01)

Default Barrier Specification, cited BS 5837:2012

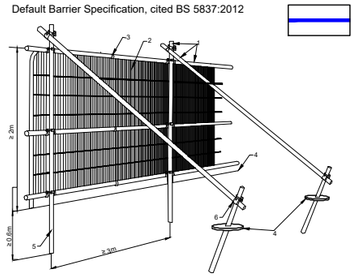

Key
1 Standard scaffold poles
2 Heavy gauge 2m tall galvanized tube and welded mesh infill panels
3 Panels secured to uprights and cross-members with wire ties
4 Ground level
5 Uprights driven into the ground until secure (minimum depth 0.6m)
6 Standard scaffold clamps

1:1000 @ A3

0m 10m 20m 40m

KEY:

- Site Boundary
- 15 Tree Numbers
- Tree Canopies
- Category 'B' RPA
- Category 'C' RPA
- 8 Trees to be Removed
- Tree Protection Barrier
- Tree Protection Barrier (Secondary Specification)
- Above Soil Surfacing

Note: Trees 2, 3, 7, 9, 10, 14-16, 18-20, 22, 24, 27, 30, 33, groups G1-G3 and woodlands W1-W3 have been plotted using measurements onsite in conjunction with aerial imagery. Their locations were not recorded on the topographical survey of the site (drawing ref: 24171-24-01-TOPOGRAPHICAL.dwg).

Note: The RPA footprint for Trees 1-4 and 19 have been displaced to allow for the effect of the adopted highway and existing building foundations. The surface area of the RPA has not been reduced.

Tree Protection Barrier Specification

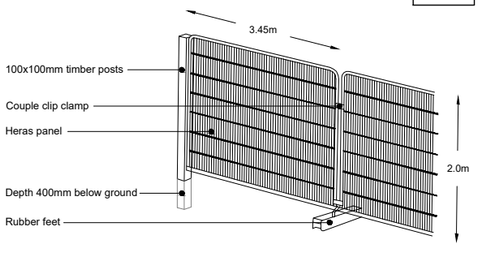

Heras panels supported with pinned rubber feet and driven 100x100mm timber posts on every second panel.

REV	DATE	NOTE	Drawn	Chk'd

REVISIONS

aspect arboriculture

TITLE
Station Road, Bagworth
Tree Protection Plan

CLIENT
A R Cartwright Limited

SCALE	DATE	DRAWN
1:500 @ A3	SEP 2025	GW

DRAWING NUMBER	REVISION
12158 TPP 01	

Based on: 24 19 05f - Block plan.dwg

APPENDIX B

WORKS AUDITING SCHEDULE (12158 WAS 01)

WORKS AUDITING SCHEDULE

Works Requiring Auditing	Tree No.	Date Undertaken	Date Reported to LPA
1. Pre-commencement meeting identifying tree removals, tree protection barrier locations and safeguarding measures, as specified within 12158_AMS.001 and illustrated on drawing no. 12158_TPP.01 Tree Protection Plan.	As drawn		
2: Inspection of tree protection barriers prior to commencement of development works by Project Arboriculturist.	As drawn		
3: New Hard Surfacing	T32 T33 T34 T36 T37		
4: Inspection of installed tree protection barriers as specified within 12158_AMS.001 and illustrated on drawing no. 12158_TPP.01 Tree Protection Plan, on an appropriate basis.	As drawn		

APPENDIX C

TREE SURVEY SCHEDULE (12158 TS 01)

aspect arboriculture

BS 5837:2012 Tree Schedule: Station Road, Bagworth

12158 TS 01

aspect arboriculture

BS5837:2012 Tree Survey: Explanation of Survey Criteria

*Area around tree deemed to contain sufficient roots and rooting volume to maintain the tree's viability, and where the protection of roots and soil structure is a priority. *The RPA has been manipulated to allow for various site features, i.e. roads, structures or changes in levels. Please refer to the Tree Constraints Plan for these changes.*

e.g.: young, semi-mature, early-mature or mature.

Sequential reference number cited on all aspect drawing.

Category prefix A-C denotes arboricultural quality, decreasing from A (high) to C (low); Subcategories 1, 2 and 3 highlight associated arboricultural (1), landscape (2) and ecological (3) qualities.

Height and Crown spread measured to the nearest half meter; # denotes where this is estimated.

Category U trees are those in such a condition that they cannot be realistically retained as living trees in the current context for the long term.

Tree Number	Common Species Name	Trunk Diameter (mm)	Height (m)	Crown Spread (m)					Crown Clearance (m)	Life Stage	Physiological Condition	Structural Condition	Comments	BS5837 Category	RPA Radius (m)
				N	E	S	W	radial							

Measured to the nearest 10mm; # denotes estimated diameter where access is not possible.

e.g.: above-average, average, below average or dead

General observations, i.e. defects, preliminary management recommendation, presence of pests/disease, perceived significance.

Height of first significant branch and/or canopy

e.g.: good, indifferent, poor, or hazardous

Colour band key:

Category A
Category B
Category C
Category U

The following survey should not be interpreted as a report on tree health and safety. Aspect's opinion of tree condition and structural potential is valid for a limited period of 12 months from the date of inspection. Validity is assumed in the absence of inclement weather and no change to the trees existing setting.

Tree Number	Common Species Name	Trunk Diameter (mm)	Height (m)	Crown Spread (m) N	E	S	W	Radial	First Significant Branch (m)	Crown Clearance (m)	Life Stage	Physiological Condition	Structural Condition	Comments	BS5837 Category	RPA Radius (m)
1	Elder	160 170 100 3*70	7					3	1.5	1	Semi Mature	Average	Indifferent	Radial crown measurement due to restricted access Unmanaged hedgerow component Low arboricultural quality	C12	3.3
2	Goat Willow	250 100#	8					3.5	2	0.5	Semi Mature	Average	Poor	Inaccessible, offsite within adjacent third-party land, unable to thoroughly inspect Radial crown measurement due to restricted access Low arboricultural quality	C12	3.3
3	Goat Willow	200 2*100#	8					4	2	1	Semi Mature	Average	Indifferent	Inaccessible, offsite within adjacent third-party land, unable to thoroughly inspect Radial crown measurement due to restricted access Low arboricultural quality	C12	3
4	Cherry	240	8.5					4	3.25	3	Semi Mature	Average	Indifferent	Radial crown measurement due to restricted access Situated within sites boundary Minor internal deadwood Bifurcates from c.2m, union appears sound Low arboricultural quality	C12	3
5	Cherry	100	5	3	2#	1#	2.5		3	2	Young	Average	Indifferent	Leans north from c.2m Readily replaceable at current size, low arboricultural value	C12	1.2
6	Ash	350#	11	6#	6	5	6.25		2.5#	1.75	Early Mature	Below Average	Indifferent	Stem inaccessible due to dense understory Situated within field boundary Above average internal deadwood Above average epicormic growth Short annual extension growth Dieback to upper crown Appears to pre exist adjacent woodland Entering a state of decline, reduced future potential	C1	4.2
7	Buddleia	5*50#	4					1.5	0.5#	0.5#	Semi Mature	Average	Indifferent	Inaccessible, offsite within neighbouring residential land, unable to thoroughly inspect Radial crown measurement due to restricted access Readily replaceable at current size, low arboricultural value	C12	1.2
8	Goat Willow	3*250 300 200 2*180 #	9	7.5	7#	5.5	6		1.25	2	Early Mature	Above Average	Poor	Inaccessible, offsite within neighbouring residential land, unable to thoroughly inspect Unsympathetic limb removals within western aspect of lower crown Multi stemmed from ground level, unions tight and included Unremarkable example of species	C1	7.2
9	Callery Pear	2*100#	4					2	1#	1#	Semi Mature	Average	Indifferent	Inaccessible, offsite within neighbouring residential land, unable to thoroughly inspect Readily replaceable at current size, low arboricultural value	C12	1.8
10	Pear	180#	9					3	1.5#	1.5	Semi Mature	Average	Indifferent	Inaccessible, offsite within neighbouring residential land, unable to thoroughly inspect Unremarkable example of species	C12	2.1

Tree Number	Common Species Name	Trunk Diameter (mm)	Height (m)	Crown Spread (m) N	E	S	W	Radial	First Significant Branch (m)	Crown Clearance (m)	Life Stage	Physiological Condition	Structural Condition	Comments	BS5837 Category	RPA Radius (m)
11	Sycamore	280 380	15.5	11#	9.75	7.5	6.75		4.5	4	Early Mature	Average	Poor	Mutually suppressed and cohesive with companion shelter Etiolated form Previous lower limb removals to crown lift Minor internal deadwood Included sub dominant stem union at c.1.25m Moderate collective value	B2	5.7
12	Sycamore	540 at c.1m	17.5	11#	8.5#	8#	5.5		5	4	Early Mature	Average	Poor	Mutually suppressed and cohesive with companion shelter Etiolated form Previous lower limb removals to crown lift Bifurcates from c.1.25m, union tight Partially occluded pruning wound at c.3m Moderate collective value	B2	6.6
13	Sycamore	320 280	17.5	10#	8#	5	3		5	5	Early Mature	Average	Poor	Mutually suppressed and cohesive with companion shelter Etiolated form Previous lower limb removals to crown lift Included primary union at c.1m Moderate collective value	B2	5.1
14	Sycamore	245	16	1.5	4#	4.75	4.75		4	6	Semi Mature	Average	Poor	Mutually suppressed and cohesive with companion shelter Etiolated form Previous lower limb removals to crown lift Cavity on southern aspect of trunk at c.1m Unremarkable example of species	C12	3
15	Silver Birch	225	16	4#	4#	6	2.25		3.25	3	Semi Mature	Average	Indifferent	Clad and obscured by Ivy, unable to thoroughly inspect Mutually suppressed and cohesive with companion shelter Etiolated form Previous lower limb removals to crown lift Unremarkable example of species	C12	2.7
16	Silver Birch	250	16	5#	4#	3.25	4.75		4.5	2.75	Early Mature	Average	Indifferent	Mutually suppressed and cohesive with companion shelter Etiolated form Previous lower limb removals to crown lift Moderate collective value	B2	3
17	Sycamore	280	15	6#	5	3.25	4.75		4.5	2.75	Early Mature	Average	Indifferent	Mutually suppressed and cohesive with companion shelter Etiolated form Previous lower limb removals to crown lift Moderate collective value	B2	3.3
18	Silver Birch	160 175	16	3.5#	1.25	2.75	3.75		2.75	3.25	Semi Mature	Average	Poor	Mutually suppressed and cohesive with companion shelter Etiolated form Previous lower limb removals to crown lift Bifurcates from ground level, unions fused up to c.1.25m Unremarkable example of species	C12	2.7

Tree Number	Common Species Name	Trunk Diameter (mm)	Height (m)	Crown Spread (m) N	E	S	W	Radial	First Significant Branch (m)	Crown Clearance (m)	Life Stage	Physiological Condition	Structural Condition	Comments	BS5837 Category	RPA Radius (m)
19	Crack Willow	295 300 330 385	15	12#	10#	7	3.75		2.5	4#	Early Mature	Average	Poor	Mutually suppressed and cohesive with companion shelter Etiolated form Previous lower limb removals to crown lift Multi stemmed from c.1.25m, unions tight Scaffold structure biased east Overhead utilities within eastern aspect of lower crown Cavities within bole Unremarkable example of species	C12	7.8
20	Silver Birch	325	16	3.25	4#	2.75	2.25		2	5	Early Mature	Average	Indifferent	Mutually suppressed and cohesive with companion shelter Etiolated form Previous lower limb removals to crown lift Moderate collective value	B2	3.9
21	Purple Sycamore	325	13.5	4.5	5.5#	4.5	4.75		1.5	1.25	Early Mature	Average	Indifferent	Mutually suppressed and cohesive with companion shelter Etiolated form Previous lower limb removals to crown lift Moderate collective value	B2	3.9
22	Silver Birch	170	12	1	2	3.75	3.25		1.5	0.5	Semi Mature	Average	Indifferent	Mutually suppressed and cohesive with companion shelter Etiolated form Previous lower limb removals to crown lift Unremarkable example of species	C12	2.1
23	Silver Birch	310	16	4.75	6.5#	3.75	3.25		3.5	4	Early Mature	Average	Indifferent	Mutually suppressed and cohesive with companion shelter Etiolated form Previous lower limb removals to crown lift Leans east from ground level Moderate collective value	B2	3.6
24	Sycamore	320	16	5.5	9#	3.5	1.5		3	3	Early Mature	Average	Poor	Mutually suppressed and cohesive with companion shelter Etiolated form Previous lower limb removals to crown lift Scaffold structure biased east Moderate collective value	B2	3.9
25	Silver Birch	300	17	0.5	3	4	4.75		0.5	0.5	Early Mature	Average	Indifferent	Mutually suppressed and cohesive with companion shelter Etiolated form Previous lower limb removals to crown lift Scaffold structure biased west Moderate collective value	B2	3.6
26	Silver Birch	270	16	3#	6.5#	2.25	4.5		6	6	Early Mature	Average	Indifferent	Mutually suppressed and cohesive with companion shelter Etiolated form Previous lower limb removals to crown lift Moderate collective value	B2	3.3

Tree Number	Common Species Name	Trunk Diameter (mm)	Height (m)	Crown Spread (m) N	E	S	W	Radial	First Significant Branch (m)	Crown Clearance (m)	Life Stage	Physiological Condition	Structural Condition	Comments	BS5837 Category	RPA Radius (m)
27	Silver Birch	260	15	4#	2.5#	3.5	4		3.5	4	Early Mature	Average	Indifferent	Mutually suppressed and cohesive with companion shelter Etiolated form Previous lower limb removals to crown lift Moderate collective value	B2	3
28	Silver Birch	400	17	5.5#	6.5#	5.75	5.75		2.75	2.75	Early Mature	Average	Indifferent	Mutually suppressed and cohesive with companion shelter Etiolated form Previous lower limb removals to crown lift Maintains single leader for majority of height Balanced radial crown and scaffold structure Moderate example of species	B12	4.8
29	Silver Birch	305	17	3.5	6#	4.25	4.75		3	3	Early Mature	Average	Indifferent	Mutually suppressed and cohesive with companion shelter Etiolated form Previous lower limb removals to crown lift Scaffold structure biased west Moderate collective value	B2	3.6
30	Sycamore	340	13	6.5#	5.5	3.75	2.25		3.25	1	Early Mature	Average	Indifferent	Mutually suppressed and cohesive with companion shelter Etiolated form Previous lower limb removals to crown lift Moderate collective value	B2	4.2
31	Silver Birch	240	14.5	2.25	1.5	5.5	4.5		3	3.5	Early Mature	Average	Indifferent	Mutually suppressed and cohesive with companion shelter Etiolated form Previous lower limb removals to crown lift Scaffold structure biased west Moderate collective value	B2	3
32	Sycamore	385	16	4	9.5#	4.75	4.25		2.5	1.75	Early Mature	Average	Indifferent	Mutually suppressed and cohesive with companion shelter Etiolated form Previous lower limb removals to crown lift Moderate collective value	B2	4.5
33	Sycamore	250	16	3.25	7.5#	2.5	2		3	3	Early Mature	Average	Indifferent	Mutually suppressed and cohesive with companion shelter Etiolated form Previous lower limb removals to crown lift Unremarkable example of species	C12	3
34	Sycamore	370 305	14	4	8.5#	3.75	4.25		2.5	1.5	Early Mature	Average	Indifferent	Mutually suppressed and cohesive with companion shelter Etiolated form Previous lower limb removals to crown lift Bifurcates from c.0.5m, unions tight Unremarkable example of species	C12	5.7
35	Silver Birch	225	13	1.25	2#	4.25	4		3.25	3.25	Early Mature	Average	Indifferent	Mutually suppressed and cohesive with companion shelter Etiolated form Previous lower limb removals to crown lift Unremarkable example of species	C12	2.7

Tree Number	Common Species Name	Trunk Diameter (mm)	Height (m)	Crown Spread (m) N	E	S	W	Radial	First Significant Branch (m)	Crown Clearance (m)	Life Stage	Physiological Condition	Structural Condition	Comments	BS5837 Category	RPA Radius (m)
36	Silver Birch	275	13	2#	6.5#	5.25	1.75		5.25	6	Early Mature	Average	Indifferent	Mutually suppressed and cohesive with companion shelter Etiolated form Previous lower limb removals to crown lift Slight lean south from ground level Moderate collective value	B2	3.3
37	Sycamore	220 240	9.5	2.5	6.5#	5	4.75		3	3	Semi Mature	Average	Poor	Mutually suppressed and cohesive with companion shelter Etiolated form Previous lower limb removals to crown lift Bifurcates from ground level, union tight with lobed reaction growth Scaffold structure biased south Unremarkable example of species	C12	3.9
G1	Goat Willow Silver Birch	3*120# av	8 av					4 av	1 av	1 av	Semi Mature	Average	Indifferent	Inaccessible, offsite within adjacent third-party land, unable to thoroughly inspect Intermittent parcel of Silver Birch and Goat Willow situated on embankment of internal pond Collection composed of predominately low value individuals	C12	2.4
G2	Apple Holly Norway Spruce Purple Elder	100 max	4 av					1 av	1# av	1# av	Young	Average	Indifferent	Inaccessible, offsite within neighbouring residential land, unable to thoroughly inspect Small parcel of ornamental plantings Readily replaceable at current size, low arboricultural value	C12	1.2
G3	Hawthorn Blackthorn English Oak Holly Sycamore Silver Birch	150 max	4.5 av					1.5 av	0.5 av	0.5 av	Young to Semi Mature	Average	Indifferent	Intermittent collection of understorey scrub Unremarkable collection	C12	1.8
H1	Elder Hawthorn	2*100 av	7 av					3.5 av	0.5 av	0.5 av	Semi Mature to Early Mature	Average	Indifferent	Partially managed field boundary hedgerow, maintained on lower canopies only	C12	1.8
H2	Hawthorn	75 av	2 max					1 av	0.5 av	0.5 av	Semi Mature	Average	Indifferent	Maintained field boundary hedgerow	C12	0.9
H3	Blackthorn Elder Hawthorn Holly	75 av	2.5 av					1.5 av	0.5 av	0.5 av	Semi Mature	Average	Indifferent	Maintained field boundary hedgerow	C12	0.9
H4	Hawthorn Elder	75# max	3 av					2 av	0.5 av	0.5 av	Young to Semi Mature	Average	Indifferent	Maintained field boundary hedgerow	C12	0.9

Tree Number	Common Species Name	Trunk Diameter (mm)	Height (m)	Crown Spread (m) N	E	S	W	Radial	First Significant Branch (m)	Crown Clearance (m)	Life Stage	Physiological Condition	Structural Condition	Comments	BS5837 Category	RPA Radius (m)
H5	Hawthorn Hazel Dogwood Cherry Plum Holly Guelder Rose Goat Willow	75# av	3 av					1.5 av	0.5 av	0.5 av	Young to Semi Mature	Average	Indifferent	Internal field boundary hedgerow	C12	0.9
W1	Ash Alder Cherry English Oak Field Maple Goat Willow Silver Birch	220# av	11 av					5.5 av	0.5 to 4	0.5 to 8	Young to Early Mature	Average	Indifferent	Inaccessible, offsite within adjacent third-party land, unable to thoroughly inspect Cohesive woodland majoring on young native broadleaves Typical etiolated form within woodland context Structures appear typical for species within current context Majority of group is homogonous in size, structure and life stage Moderate collection	B12	2.7
W2	Ash Alder Cherry English Oak Goat Willow Hawthorn Lime Silver Birch	100# av	8 av					3# av	1 av	1 av	Young to Semi Mature	Average	Indifferent	Inaccessible, offsite within adjacent third-party land, unable to thoroughly inspect Cohesive woodland majoring on young native broadleaves Typical etiolated form within woodland context Structures appear typical for species within current context Majority of group is homogonous in size, structure and life stage Individually of low significance, moderate value as collective only	B2	1.2
W3	Ash Cherry Holly Cherry Plum English Oak Hawthorn Silver Birch	100# av	7 av					2 av	1av	1 av	Young to Semi Mature	Average	Indifferent	Inaccessible, offsite within adjacent third-party land, unable to thoroughly inspect Cohesive woodland majoring on young native broadleaves Typical etiolated form within woodland context Structures appear typical for species within current context Majority of group is homogonous in size, structure and life stage Individually of low significance, moderate value as collective only	B2	1.2

APPENDIX D

BARRIER SPECIFICATIONS

Recommended Tree Protection Fencing Specification for this Development

(Source: BS 5837: 2012)

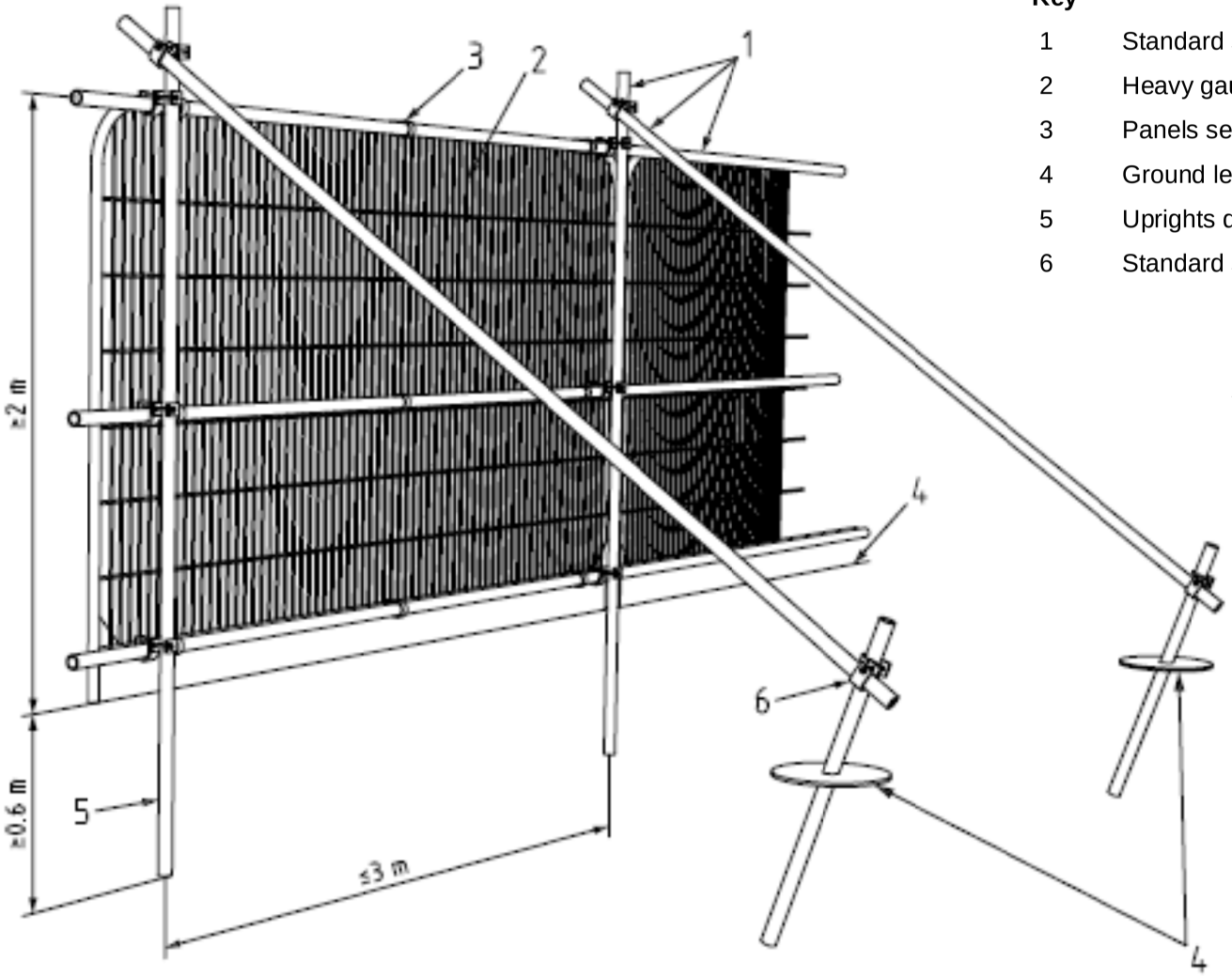

Key

1	Standard scaffold poles
2	Heavy gauge 2m tall galvanized tube and welded mesh infill panels
3	Panels secured to uprights and cross-members with wire ties
4	Ground level
5	Uprights driven into the ground until secure (minimum depth 0.6m)
6	Standard scaffold clamps

Notes:

- *Supports are to be sited tree side of the panel front face.*
- *All weather notices should be attached to every fourth panel highlighting the importance of the barrier in its correct position. An example is provided overleaf which may be duplicated for use on this development.*

aspect arboriculture

Tree Protection Barrier Specification

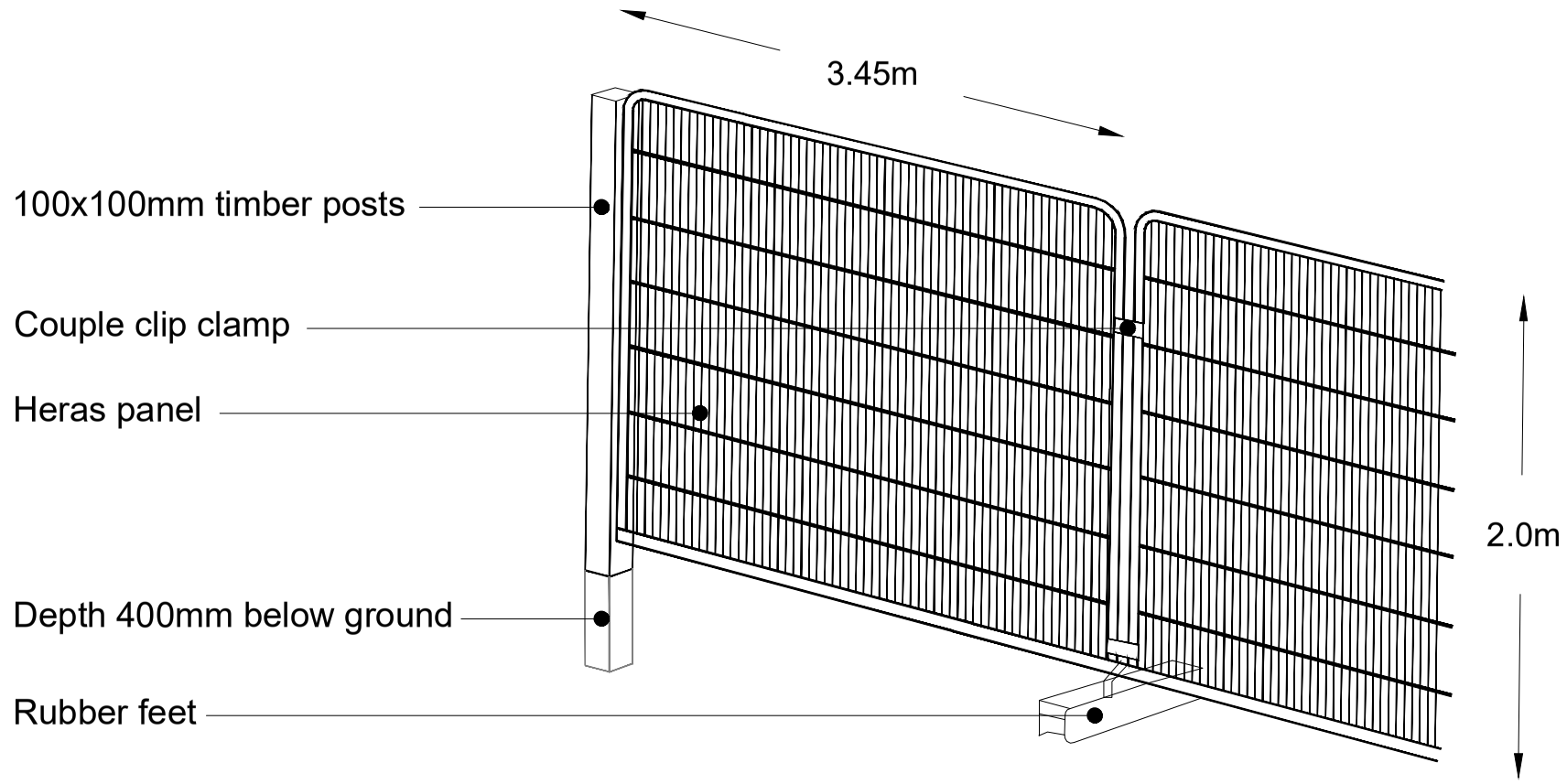

Heras panels supported with pinned rubber feet and driven 100x100mm timber posts on every second panel.

aspect arboriculture

TREE PROTECTION BARRIER

- **DO NOT MOVE THIS FENCE**
- **NO SITE ACTIVITY TREE SIDE OF FENCE**
- **NO STORAGE TREE SIDE OF FENCE**

- **For assistance call Aspect Arboriculture: 01295 276066**

aspect arboriculture

landscape planning • ecology • arboriculture

aspect

Aspect Arboriculture
West Court
Hardwick Business Park
Noral Way
Banbury
Oxfordshire OX16 2AF

T: 01295 276066
F: 01295 265072
E: info@aspect-arbor.com
W: www.aspect-arbor.com