Cadeby Pipe Factory

Discharge of Conditions 10, 11 and 12

Heaton Planning Ltd / FP McCann Ltd

14 October 2026

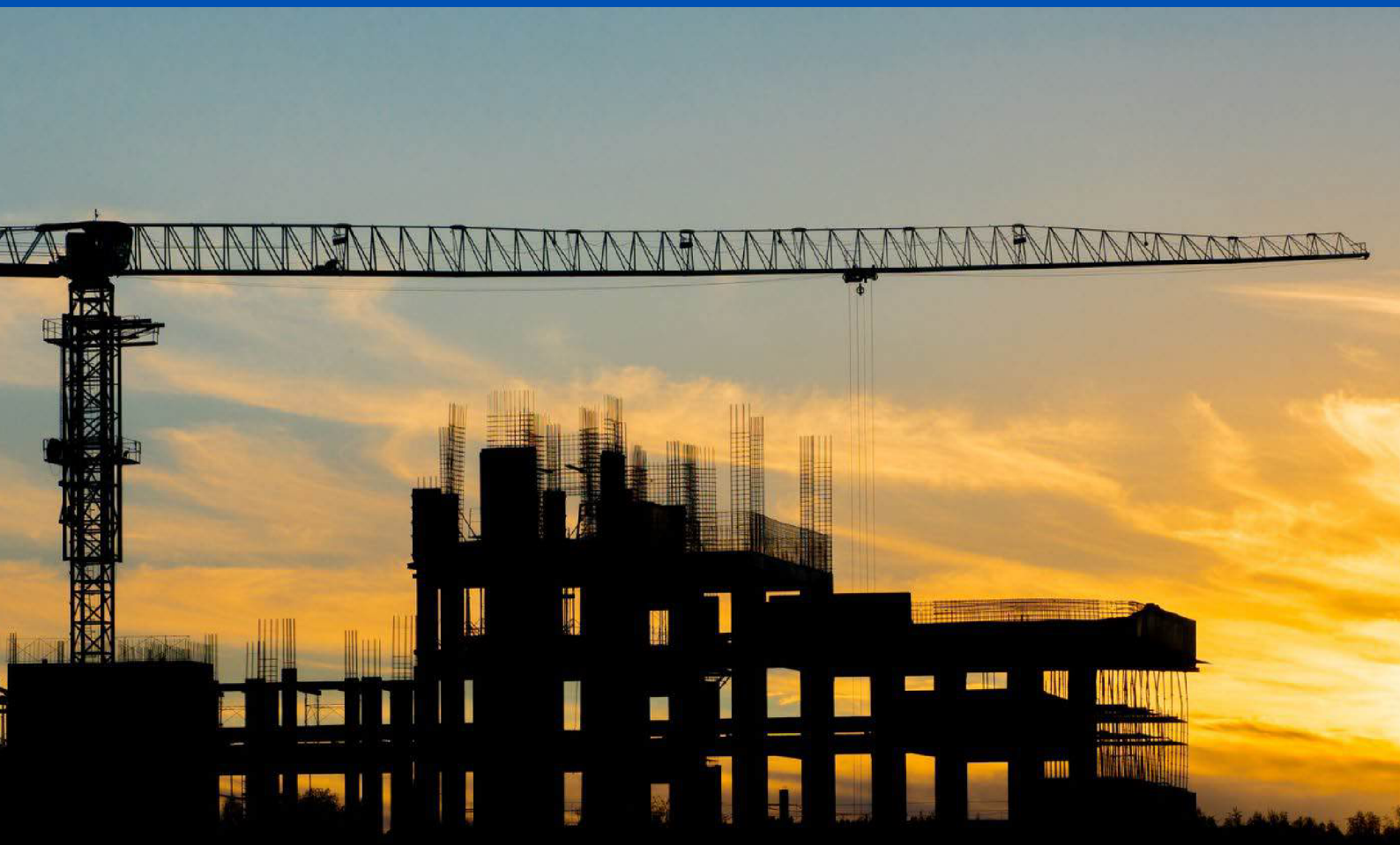

Envireau

Prepared For: Heaton Planning Ltd **/ FP McCann Ltd**

Date Issued: 19/10/2026

Project Code: 3491675

Revision: REV02

Authors

	Name	Signed
Prepared by	Mairi Teasdale	[redacted]
Checked by	Lee Clarke	
Approved by	Lee Clarke	

Revision History

	Details	Prepared by	Checked by	Approved by	Issue Date
REV01	First issue	MT	LC	LC	08.10.2026
REV02	Final	MT	LC	LC	19.10.2026

© Envireau Ltd. 2026.

Registered in England & Wales No. 6647619. Registered office: Spring Lodge, 172 Chester Road, Helsby, Cheshire, WA6 0AR

Any report provided by Envireau Ltd. is for the client's use and may be reproduced by the client for internal use. The report must not be issued to third parties without the express written consent of Envireau Ltd. If the report is released to any third party, Envireau Ltd will not accept responsibility or liability of any nature to that third party to whom the report (or part thereof) is released. Moreover, Envireau Ltd will accept no liability for damage or loss as a result of any report being made known to, or relied upon by, a third party, unless expressly agreed with Envireau Ltd in writing.

Contents

1 Introduction 1

1.1 Background 1

1.2 Scope of Work 1

1.3 Planning Policies and Guidance 1

2 Condition 10 3

2.1 Wording of condition 3

3 Condition 11 5

3.1 Wording of condition 5

4 Condition 12 6

4.1 Wording of condition 6

5 Conclusions 7

Figures

Figure 1 Site Setting 2

Appendices

Appendix A Outline Development Layout
Appendix B Drainage Design Overview
Appendix C Drainage Details
Appendix D Hydraulic Modelling Results
Appendix E Construction Surface Water Management Plan
Appendix F SuDS Maintenance Schedule

1 Introduction

1.1 Background

Full planning permission (Planning Application Ref. 25/00306/FUL) has been granted by Hinckley and Borough Council to FP McCann Ltd for the erection of a pipe manufacturing facility with associated storage at land off Brascote Lane, Cadeby, Nuneaton, Leicestershire (the Site).

The planning permission allows for the development of a new plastic pipe factory facility with associated storage areas on agricultural land adjacent to the existing manufacturing facility, access to the new plastic pipe factory via access roads on existing hardstanding areas, and biodiversity improvements to a previously restored parcel of land.

The new plastic pipe factory facility and associated storage areas are centred on NGR SK 43197 02143. The Site comprises three fields currently used for livestock grazing. For clarity, the fields are herein referred to as the 'Western', 'Central', and 'Eastern' fields. The Central field is the location of new storage areas, the Eastern field is the location of the pipe factory and further storage areas, whilst the Western field is the location for the biodiversity improvements on land restored to grazing land as part of the site's previous use of mineral extraction.

Figure 1 provides the site setting whilst the outline development layout is provided in Appendix A.

1.2 Scope of Work

The planning permission has conditions relating to the surface water drainage at the development. These are conditions 10, 11 and 12.

This document presents drawings and information for the discharge of these planning conditions.

1.3 Planning Policies and Guidance

This report has been prepared in line with the following policies and guidance:

- Leicestershire County Council Interim LLFA Guidance Note: Planning and Development in Leicestershire, October 2018, Rev A;
- Hinkley and Bosworth Borough Council Policy DM7 of the adopted Site Allocations and Development Management Policies Development Plan Document – Local Plan 2006-2026 (2016);
- CIRIA SuDS Manual C753;
- National Planning Policy Framework (NPPF) and Planning Practice Guidance: Flood Risk and Coastal Change;
- Building Regulations Part H;
- CIRIA: Guidance on construction of SuDS (C768); and
- Non-Statutory Technical Standards for SuDS.

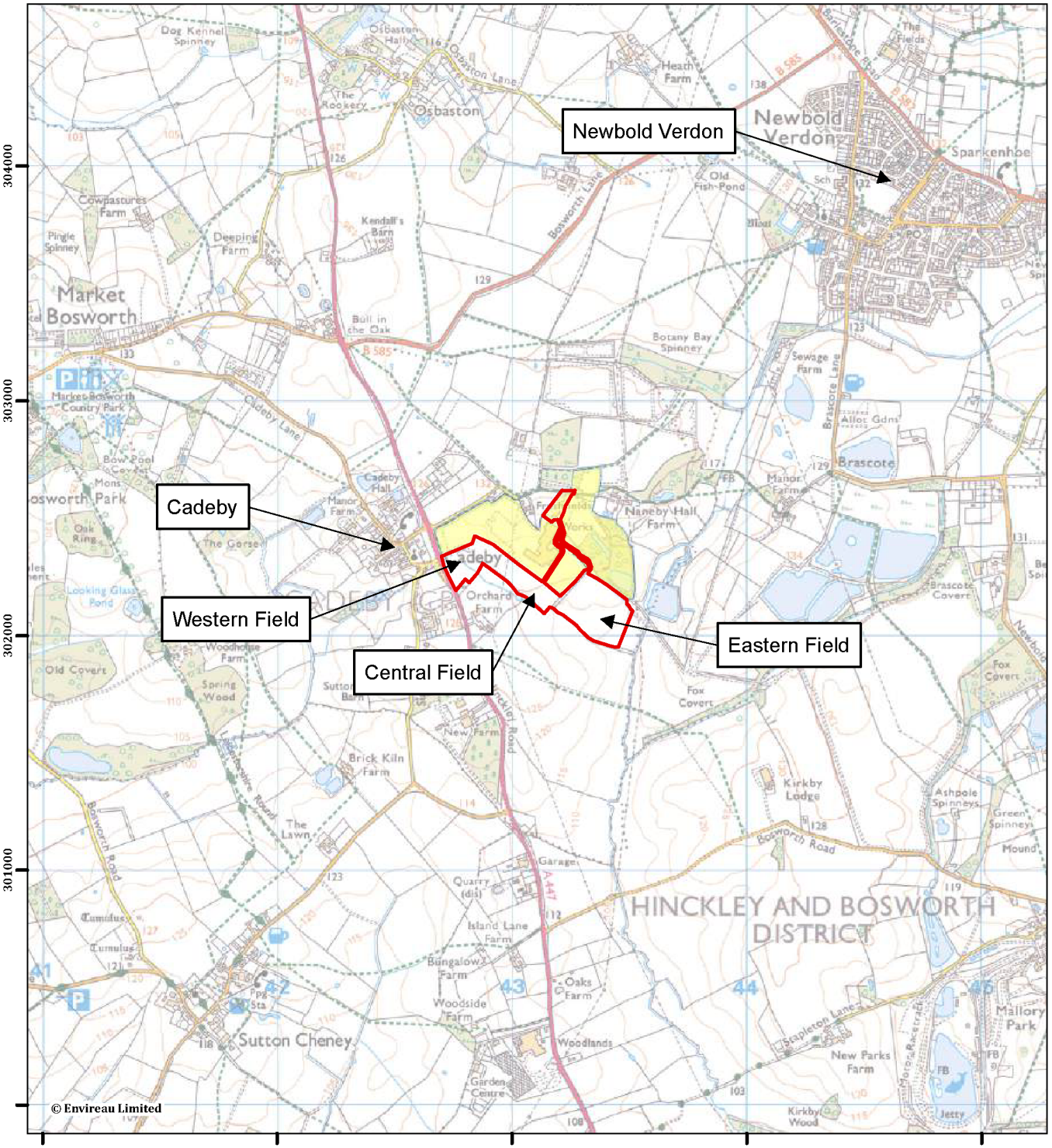

Figure 1: Site Location and Setting

Cadeby, Leicestershire

Application Site Boundary

Existing Site Area

Notes:

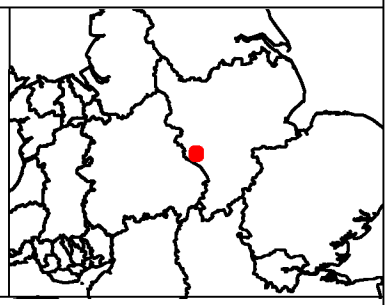

0 250 500 750 1,000 Meters

Scale: 1:25,000 at A4

01 October 2026

NGR: 443,107 E / 302,285 N

Project No.	3491036
Client:	FP McCann
Drawn by:	MT/LC
Ref:	Site Setting and Location

Envireau

© Crown Copyright All rights reserved. Licence number: 100050002.

2 Condition 10

2.1 Wording of condition

Development shall not begin until a scheme to provide a sustainable surface water drainage system in accordance with the Flood Risk Assessment and Drainage Strategy dated March 2025 has been submitted to and approved by the Local Planning Authority, and the scheme shall subsequently be implemented in accordance with the approved details before the development is completed.

***Reason**: To ensure that surface water is managed appropriately to prevent increase in flood risk, in accordance with Policy DM7 of the adopted Site Allocations and Development Management Policies Development Plan Document (2016)*

2.1.1 Design and Layout

An overview of the proposed surface water drainage scheme is provided in Appendix B. Drainage details are provided in Appendix C.

The drainage scheme presented is based on the drainage principles set out within the approved Flood Risk Assessment and Drainage Strategy (Envireau, 2025).

The drainage scheme has been designed to capture all runoff from hardstanding areas. The drainage design comprises interconnected swales, attenuation basins, and pipework across the Central and Eastern Fields to manage and attenuate surface water runoff.

In the Central Field, boundary swales will increase in size downstream, with depths ranging from 0.3 m to 1.0 m. Flow will be regulated by weirs within the swales and by two attenuation basins located in the southern part of the field. The final basin will require minor land raising along its southern edge and will discharge to the Eastern Field drainage system via a restricted piped network.

The Eastern Field drainage system will comprise concrete capture channels around the proposed building, draining to a series of cascading attenuation basins located along the south-western boundary. These basins will discharge to a final attenuation basin in the south of the site, which will provide approximately 7,500 m^3 of storage (8,750 m^3 including freeboard). Flows from the site will discharge to the adjacent watercourse at a restricted rate of 21.1 l/s via a headwall and 77 mm diameter orifice.

The proposed drainage network will operate independently of the existing site drainage and independent of an existing drainage channel (located in the Eastern field) except at the final outfall. A new culverted crossing will provide access between the Central and Eastern Fields while also accommodating the connecting drainage infrastructure.

All swales and basins will be constructed with 1:3 side slopes and a minimum 300 mm freeboard in accordance with the CIRIA SuDS Manual. The features will be seeded and grassed to provide additional water quality treatment and landscape integration. Basins will be fitted with FP McCann HW medium headwalls, or similar (see Appendix C).

2.1.2 Hydraulic Calculations

Hydraulic calculations supporting the drainage scheme are provided in Appendix D. Modelling has been undertaken using Causeway Flow+ v12.0.

Model node plans and modelled drainage cross sections are also provided in Appendix D.

3 Condition 11

3.1 Wording of condition

Prior to commencement of development details in relation to the management of surface water on site during construction of the development shall be submitted to, and approved in writing by, the Local Planning Authority. Details should demonstrate how surface water will be managed on site to prevent an increase in flood risk during the various construction stages of development from initial site works through to completion. This shall include temporary attenuation, additional treatment, controls, maintenance and protection. Details regarding the protection of any proposed infiltration areas should also be provided.

Reason: To ensure that surface water is managed appropriately to prevent increase in flood risk, in accordance with Policy DM7 of the adopted Site Allocations and Development Management Policies Development Plan Document (2016).

A Construction Surface Water Management Plan is presented in Appendix E.

4 Condition 12

4.1 Wording of condition

Prior to commencement of development details in relation to the long-term maintenance of the sustainable surface water drainage system on the development shall be submitted to and approved in writing by the Local Planning Authority. Details of the SuDS Maintenance Plan should include responsibilities and schedules for routine maintenance, remedial actions and monitoring of the separate elements of the system and should also include procedures that must be implemented in the event of pollution incidents within the development site.

Reason: To ensure that surface water is managed appropriately to prevent increase in flood risk, in accordance with Policy DM7 of the adopted Site Allocations and Development Management Policies Development Plan Document (2016).

A SuDS Maintenance Schedule is presented in Appendix F.

5 Conclusions

Full planning permission (Planning Application Ref. 25/00306/FUL) has been granted by Hinckley and Borough Council to FP McCann Ltd for the erection of a pipe manufacturing facility with associated storage at land off Brascote Lane, Cadeby, Nuneaton, Leicestershire (the Site).

The planning permission allows for the development of a new plastic pipe factory facility with associated storage areas on agricultural land adjacent to the existing manufacturing facility, access to the new plastic pipe factory via access roads on existing hardstanding areas, and biodiversity improvements to a previously restored parcel of land.

This technical note is in fulfilment of planning condition No. 10, 11 and 12 relating to drainage, construction and SuDS maintenance.

The scheme has been designed to capture all runoff from the proposed hardstanding areas and direct this runoff to swales and attenuation basins. The final discharge will maximise storm storage safely and restrict outflows to Greenfield runoff rates.

A minimum 300mm+ freeboard is provided in the attenuation basins for all durations of the 1 in 100 year + 40% climate change event.

Development details in relation to the management of surface water on site during construction of the development have been provided.

The SuDS maintenance schedule includes regular and occasional maintenance requirements and actions along with remedial actions and timings. A record of maintenance works will be kept by FP McCann Ltd.

Based on the information submitted in this report Envireau consider that Planning Condition 10, 11 & 12 can be discharged.

Appendices

Appendix A Outline Development Layout

© Envireau Ltd. 2026 \ 3491675 Heatons Cadeby Pipe Factory Discharge of Conditions \ RPT DoC 10,11 & 12

FP McCann

Proposed Pipe Factory

Proposed Site Layout Plan

Site Entrance

Parking Provision

Brascote Lane

Retained Hedgerows & Hedgerow Trees

Realigned Ditch Corridor with Marshland

Existing FP McCann

Other Neutral Grassland

Proposed Pipe Factory

Proposed External Storage Area

New Native Scrub

Establishment of a Secondary Hedgerow together with the "Gapping Up" of Existing

Biodiversity Enhancement Area
Enhanced Ditch, Marsh, Grassland, and enhanced Hedgerow

Retained Hedgerows & Hedgerow Trees

Surface Water Management - *Swale & Ponds*

Retained Internal Vegetation Structure

Proposed External Storage Area

Surface Water Management - *Swale & Ponds*

Retained Hedgerows & Hedgerow Trees

A447

A

A'

B

B'

C

C'

130.0

126.0

128.0

124.0

118.0

114.7

LEGEND

- Application Site Boundary
- Other Land Under the Control of the Applicant
- 117.0 Contours & Spot Heights
- Internal Access Routing

Proposed Biodiversity Enhancement Area

- Proposed Other Neutral Grassland
- Proposed Native Scrub
- Proposed Realigned Ditch Corridor with Peripheral Marshy Vegetation
- Proposed Secondary Native Hedgrow Planting together with the "Gapping Up" of Existing
- Cross Section Locations

KEDD Limited

PROJECT:
FP McCann: Proposed Pipe Factory

TITLE:
Proposed Site Layout Plan

REF NO:
KD.FPPF.1.D.003

DATE:
March 2025

SCALE:
1:3,000 @ A3

STATUS:
FINAL

N

This drawing may not be used without the consent of Kedd Limited
Regus Edmund House, 12-22 Newhall Street, Birmingham B3 3AS
© Crown copyright and database rights [2024] Ordnance Survey AC0000808122

Appendix B Drainage Design Overview

© Envireau Ltd. 2026 \ 3491675 Heatons Cadeby Pipe Factory Discharge of Conditions \ RPT DoC 10,11 & 12

Notes:

GENERAL

1. DO NOT SCALE.

2. THIS DRAWING IS TO BE READ IN CONJUNCTION WITH ALL OTHER RELEVANT DRAWINGS.

3. UNTIL TECHNICAL APPROVAL HAS BEEN OBTAINED FROM THE RELEVANT AUTHORITIES IT SHOULD BE UNDERSTOOD THAT ALL DRAWINGS ISSUED ARE PRELIMINARY AND NOT FOR CONSTRUCTION. SHOULD THE CONTRACTOR START SITE WORK PRIOR TO APPROVAL HAS BEEN GIVEN, IT IS ENTIRELY AT OWN RISK.

4. ALL DIMENSIONS SHOWN ARE IN MILLIMETRES UNLESS NOTED OTHERWISE.

DRAINAGE

- Western Boundary Swale
- Upper Basins
- Surface Water Concrete Swale
- Eastern Boundary Swale
- Lower Cascading Basins
- Final Basin
- Existing Local Drainage Channel
- Surface Runoff Overland Flow Direction
- Manhole Chamber
- Gulley
- Surface Water Drainage Pipe Run
- Drainage Flow Direction
- Headwall
- Flow Control
- Roof Downpipe Connection to Manhole

S-1
CL:130.000m
IL:129.750m

S0
CL:129.900m
IL:129.650m

S1
CL:129.891m
IL:129.641m

S2
CL:129.148m
IL:128.648m

S3
CL:127.888m
IL:127.388m

S4
CL:127.204m
IL:126.454m

S5
CL:126.705m
IL:125.955m

S6
CL:126.079m
IL:125.079m

S7
CL:125.935m
IL:124.935m

S8
CL:125.828m
IL:124.245m

S12
CL:125.500m
IL:124.205m

S13
CL:124.944m
IL:123.944m

S14
CL:123.993m
IL:122.993m

S15
CL:123.071m
IL:121.534m

S18
CL:123.071m
IL:121.496m

I0
CL:123.488m
IL:122.147m

I1
CL:123.837m
IL:120.645m

F0
CL:123.580m
IL:122.080m

F1
CL:122.812m
IL:121.459m

F2
CL:121.700m
IL:119.975m

F3
CL:120.140m
IL:118.400m

F4
CL:120.000m
IL:117.100m

F5
CL:117.750m
IL:115.433m

F6
CL:123.580m
IL:122.080m

F7
CL:123.092m
IL:121.670m

F8
CL:121.913m
IL:120.500m

F9
CL:120.489m
IL:119.000m

F10
CL:120.000m
IL:118.000m

F11
CL:118.717m
IL:116.440m

C0
CL:118.000m
IL:116.400m

C1
CL:117.800m
IL:115.433m

C2
CL:117.000m
IL:115.400m

C3
CL:116.750m
IL:114.419m

C4
CL:116.000m
IL:114.400m

C5
CL:115.544m
IL:113.418m

C6
CL:115.000m
IL:113.400m

C7
CL:114.700m
IL:112.423m

C8
CL:114.700m
IL:112.400m

C9
CL:114.650m
IL:111.484m

C10
CL:114.650m
IL:111.400m

C11
CL:112.000m
IL:111.350m

ES9
CL:119.122m
IL:118.872m

ES8
CL:118.923m
IL:118.673m

ES7
CL:118.398m
IL:118.148m

ES6
CL:118.143m
IL:117.893m

ES5
CL:116.873m
IL:116.623m

ES4
CL:116.252m
IL:115.752m

ES3
CL:115.660m
IL:115.160m

ES2
CL:115.104m
IL:114.354m

ES1
CL:114.650m
IL:113.543m

ES0
CL:114.650m
IL:111.484m

WESTERN FIELD

CENTRAL FIELD

EASTERN FIELD

FLOW RESTRICTION WEIR
DESIGN WIDTH 0.428 m
DESIGN FLOW 25 l/s

FLOW RESTRICTION WEIR
DESIGN WIDTH 0.685 m
DESIGN FLOW 40 l/s

FLOW CONTROL WEIR
DESIGN WIDTH 0.428 m
DESIGN FLOW 25 l/s

Upper Basin
1 in 3 side slope
Volume 542 m³

Upper Basin
1 in 3 side slope
Volume 723 m³

Upper Basin Headwalls
FP McCann Pre Cast
Concrete Headwall

FLOW CONTROL (ORIFICE)
DESIGN WIDTH 0.394 m
DESIGN FLOW 385 l/s

Box Culvert
FP McCann Pre Cast
Concrete Box Culvert
1500mm x 1500mm

Lower Cascading Basin
1 in 3 side slope
Volume 680 m³

Lower Cascading Basin
1 in 3 side slope
Volume 803 m³

Lower Cascading Basin
1 in 3 side slope
Volume 444 m³

Lower Cascading Basin
1 in 3 side slope
Volume 370 m³

Lower Cascading Basin
1 in 3 side slope
Volume 1186 m³

Final Basin
1 in 3 side slope
Volume 8741 m³

Final Basin Headwalls
FP McCann Pre Cast
Concrete Headwall

Final Basin Headwalls
FP McCann Pre Cast
Concrete Headwall

Final Basin Headwalls
FP McCann Pre Cast
Concrete Headwall

Erosion control feature to be installed
along the northern rim of the final basin
e.g. matting to prevent erosion of the banks
before vegetation has grow.

FLOW CONTROL (ORIFICE)
DESIGN WIDTH 0.077 m
DESIGN FLOW 21.1 l/s

FLOW CONTROL (ORIFICE)
DESIGN WIDTH 0.436 m
DESIGN FLOW 600 l/s

Grated Manhole

Shallow Concrete Swale

Tank

Hopper

Conveyor

Pond

Drain

Highfields

Orchard Farm

ditch

REV:	DESCRIPTION:	BY:	DATE:
A	FIRST ISSUE FOR COMMENT	MT	06/10/2026

STATUS:

CLIENT: FP MCCANN

ARCHITECT: Envireau

SITE: CADEBY PIPE FACTORY

TITLE: DRAINAGE

SCALE AT A0:	DATE:	DRAWN:	CHECKED:
1 - 750	06/10/2026	MT	LC

PROJECT NO:	DRAWING NO:	REVISION:
3491675	1675_FPM_CPF_DD_001	A

Appendix C Drainage Details

© Envireau Ltd. 2026 \ 3491675 Heatons Cadeby Pipe Factory Discharge of Conditions \ RPT DoC 10,11 & 12

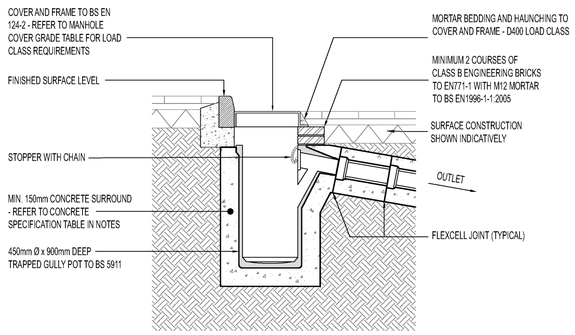

TYPICAL PRECAST CONCRETE TRAPPED GULLY DETAIL

(SCALE 1:25)

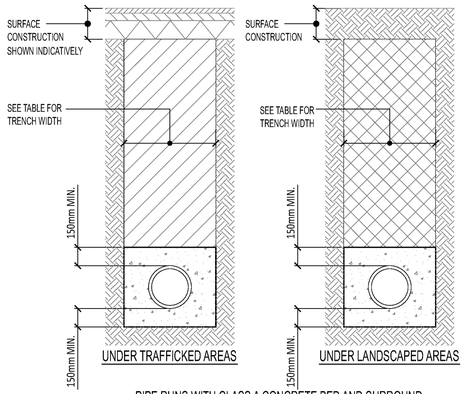

PIPE RUNS WITH CLASS A CONCRETE BED AND SURROUND

TYPE 'A'
APPLICABLE UNDER ROADS AND PARKING AREAS WHERE DRAINS HAVE LESS THAN 1200mm COVER

TYPE 'A'
APPLICABLE UNDER FOOTPATHS, VERGES AND OTHER NON-TRAFFICKED AREAS WHERE DRAINS HAVE LESS THAN 600mm COVER

TYPICAL PIPE BEDDING AND TRENCH DETAILS

NOTE: NO MECHANICAL COMPACTION WITHIN 300mm OF CROWN PIPE.

PIPE BEDDING AND TRENCH KEY

- GRANULAR MATERIAL COMPLYING WITH TABLE
- SELECTED EXCAVATED MATERIAL COMPLYING WITH CLAUSE 2.116 IN ACCORDANCE WITH 'THE CIVIL ENGINEERING SPECIFICATION FOR THE WATER INDUSTRY' 5TH EDITION IN LAYERS NOT EXCEEDING 225mm
- GRANULAR SUB-BASE MATERIAL (DOT TYPE 1) DEPOSITED IN LAYERS NOT EXCEEDING 225mm UNCONSOLIDATED THICKNESS THEN FULLY COMPACTED
- CONCRETE SURROUND FOR MIX SEE DRAINAGE NOTES

GRANULAR MATERIAL TABLE	
DIAMETER OF DRAIN (mm)	AGGREGATE
100	10mm SINGLE SIZE
150	10 OR 14mm SINGLE SIZE OR 14-5mm GRADED
150-500	10, 14 OR 20mm SINGLE SIZE OR 20-5mm GRADED
OVER 500	10,14, 20 OR 40mm SINGLE SIZE OR 40-5mm GRADED
NOTE: NO MECHANICAL COMPACTION WITHIN 300mm OF CROWN OF PIPE	

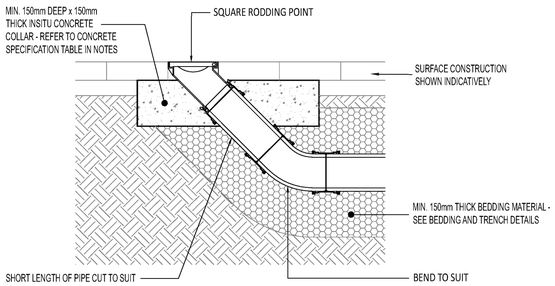

TYPICAL RODDING EYE DETAIL

(SCALE 1:10)

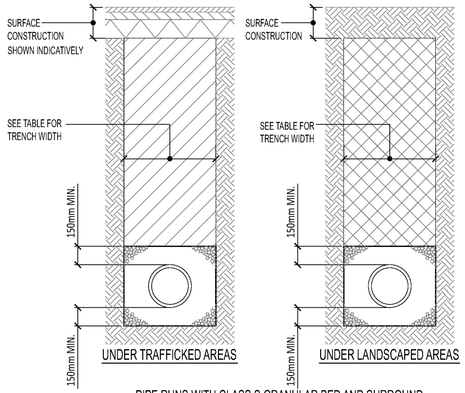

PIPE RUNS WITH CLASS S GRANULAR BED AND SURROUND

TYPE 'S'
APPLICABLE UNDER ROADS AND PARKING AREAS WHERE DRAINS HAVE MORE THAN 1200mm COVER

TYPE 'S'
APPLICABLE UNDER FOOTPATHS, VERGES AND OTHER NON-TRAFFICKED AREAS WHERE DRAINS HAVE MORE THAN 600mm COVER

TYPICAL PIPE BEDDING AND TRENCH DETAILS

NOTE: NO MECHANICAL COMPACTION WITHIN 300mm OF CROWN PIPE.

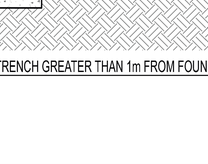

SECTION ON DRAIN WITH CONCRETE BED AND SURROUND AT PIPE JOINTS

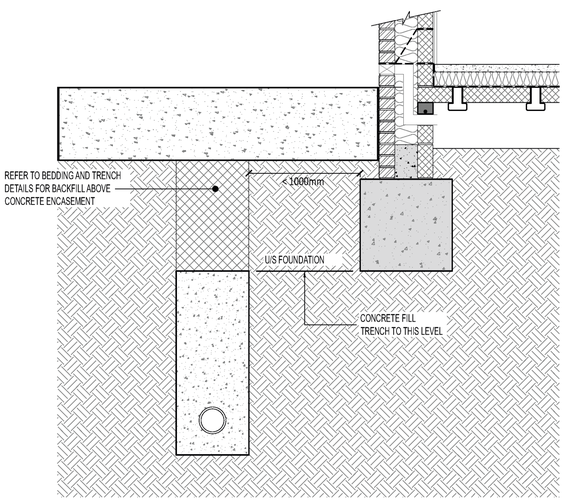

TRENCH CLOSER THAN 1m TO FOUNDATION

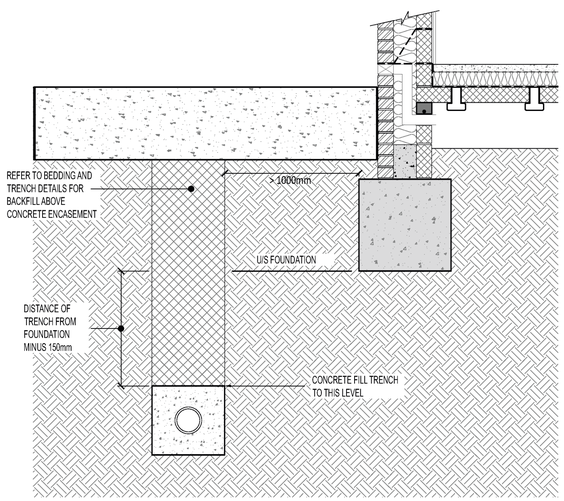

TRENCH GREATER THAN 1m FROM FOUNDATION

PIPE RUNS NEAR BUILDINGS

(SCALE 1:20)

PRIVATE DRAINAGE DETAIL NOTES

ALL WORK TO PRIVATE SEWERS IS TO BE UNDERTAKEN IN ACCORDANCE WITH THE CURRENT BRITISH STANDARDS, BUILDING REGULATIONS AND EUROCODES.

THE CONTRACTOR SHALL BE RESPONSIBLE FOR CHECKING THE EXISTING LINE, INVERT LEVEL AND PIPE DIAMETER OF THE EXISTING CONNECTION POINTS FOR BOTH THE FOUL AND SURFACE WATER SYSTEMS, PRIOR TO UNDERTAKING INSTALLATION OF ANY NEW DRAINAGE WORKS. ANY DEVIATION TO THE LEVELS AND POSITIONS INDICATED ON THE DRAWING SHOULD BE BROUGHT TO THE IMMEDIATE ATTENTION OF THE PROJECT ENGINEER.

FOR DETAILS OF GROUND CONDITIONS REFER TO THE GROUND INVESTIGATION REPORT.

THE FOLLOWING PIPE STRENGTHS SHALL BE ADOPTED UNLESS NOTED OTHERWISE:-

PRIVATE PIPES UP TO AND INCLUDING 300mm DIAMETER TO BE CLAY WARE TO BSEN295 CLASS 160 OR PLASTIC TO BS EN 1401-1:2009 AND BS EN 13598.

PRIVATE PIPES OVER 300mm DIAMETER TO BE CONCRETE TO BS5911 CLASS M.

WHERE PIPES AND OTHER DRAINAGE COMPONENTS ARE TO RECEIVE TRADE EFFLUENT THE PRINCIPAL CONTRACTOR SHALL ENSURE THEY ARE ADEQUATE TO RECEIVE THE DISPOSAL OF CHEMICALS AS LISTED IN THE CONTRACT DOCUMENTS.

ALL PIPE RUNS TO BE LAID WITH FLEXIBLE JOINTS.

PIPES LOCATED IN HIGHWAYS TO BE LAID A MINIMUM OF 1m FROM THE KERB EDGE.

ALL PIPES ENTERING AND EXITING MANHOLES ARE TO BE CONNECTED WITH PIPE SOFFITS LEVEL UNLESS NOTED OTHERWISE.

ALL INVERTS SPECIFIED ARE OUTGOING (EXCEPT BACKDROP)

CONNECTIONS TO BE MADE BY PURPOSE MADE JUNCTIONS AS FAR AS PRACTICABLE, OR USING PIPE BENDS TO BE TURNED IN DIRECTION OF FLOW.

ALL DRAINS TO BE PRESSURE TESTED PRIOR TO BACKFILLING, AND UPON COMPLETION OF SURFACING. ALL DRAINS TO BE INSPECTED BY CCTV IMMEDIATELY PRIOR TO PRACTICAL COMPLETION.

PRE-FORMED CHANNELS ARE TO BE USED IN MANHOLES WHERE APPLICABLE.

GRANOLITHIC CONCRETE BENCHING TO BE STEEL TROWELLED TO A DENSE SMOOTH FACE NEATLY SHAPED AND FINISHED TO ALL BRANCH CONNECTIONS.

ROAD GULLY CONNECTIONS TO BE 150mm DIAMETER LAID AT A MINIMUM GRADIENT OF 1:150 UNLESS NOTED OTHERWISE.

ALL DRAINAGE WORKS WITHIN THE ZONE OF INFLUENCE OF TREES ARE TO BE CONSTRUCTED IN ACCORDANCE WITH THE NHBC STANDARDS.

ALL BYPASS INTERCEPTORS ARE TO BE INSTALLED STRICTLY IN ACCORDANCE WITH MANUFACTURERS RECOMMENDATIONS.

CONCRETE MIXES

THE FOLLOWING CONCRETE MIXES ARE TO BE USED (IN ACCORDANCE WITH BS 8500) :-

CONCRETE SPECIFICATION	
DC-CLASS	CONCRETE MIX
DC1	ST4 / GEN 3
DC2	FND 2
DC2ₛ	FND 2ₛ
DC3	FND 3
DC3ₛ	FND 3ₛ
DC4	FND 4
DC4ₛ	FND 4ₛ
DC4ₐ	FND 4ₐ
SUMP CLASS S3 FOR ALL DRAINAGE WORKS	

MANHOLE COVER REQUIREMENTS

ALL COVERS TO BE IN ACCORDANCE WITH BS EN 124. MATERIAL AND COVER TYPE TO SUIT ARCHITECTURAL FINISHES.

LOAD CLASS REQUIREMENTS	
LOCATION	CLASS
LANDSCAPE	A15
FOOTPATHS	B125
PARKING AREAS / CARRIAGEWAYS	D400

ROCKER PIPE

ROCKER PIPE TABLE	
PIPE DIAMETER (mm)	ROCKER PIPE LENGTH (mm)
150-600	600
675-750	1000
OVER 750	1250

MANHOLE CHAMBER DIAMETER

MANHOLE CHAMBER SIZES	
DIA. OF LARGER PIPE IN MH	INTERNAL CHAMBER DIA. (mm)
LESS THAN 375mm	1200
375mm-700mm	1500
750mm-900mm	1800
GREATER THAN 900mm	PIPE DIA. + 900

TRENCH WIDTH REQUIREMENTS

TRENCH WIDTHS TABLE	
DIAMETER OF DRAIN (mm)	TRENCH WIDTH (mm)
100	550
150	600
225	700
300	750

FP McCann
Cadeby, Leicestershire

PRIVATE DRAINAGE DETAILS SHEET 1

CONTRACTUAL RESIDUAL CDM RISKS

RISK ITEM	MITIGATION MEASURES BY CONTRACTOR
CLOSE PROXIMITY OF TREES.	ALL NECESSARY PRECAUTIONS TO BE TAKEN WHEN CRANING.
EXISTING ON SITE / CROSS SITE SERVICES.	LOCATE, DEMARK AND PROTECT OR MAKE SAFE ALL EXISTING ON SITE / CROSS SITE SERVICES PRIOR TO THE COMMENCEMENT OF ANY WORKS.
LIVE SITE	CONTRACTOR TO PROVIDE PROTECTION TO PREVENT UNAUTHORISED ACCESS TO THE CONSTRUCTION AREA & ANY OPEN EXCAVATIONS.
EXISTING ROAD	CARE TO BE TAKEN NOT TO UNDERMINE EXISTING ROAD AND PAVEMENT GIVEN THE PROXIMITY OF REQUIRED EXCAVATIONS.

Rev.	Date	Revision Description	Drawn	Auth'd
C01	02.10.26	FIRST ISSUE	MT	LC

Notes:

1. DO NOT SCALE THIS DRAWING. THE CONTRACTOR SHALL VERIFY ALL DIMENSIONS AND EXISTING CONDITIONS ON SITE PRIOR TO COMMENCING THE WORKS.
2. THIS DRAWING IS TO BE READ IN CONJUNCTION WITH ALL RELEVANT ARCHITECTS, ENGINEERS AND SPECIALISTS DRAWINGS AND SPECIFICATIONS.
3. ALL DIMENSIONS IN MILLIMETRES UNLESS NOTED OTHERWISE. ALL LEVELS IN METRES UNLESS NOTED OTHERWISE.
4. ANY DISCREPANCIES NOTED ON SITE ARE TO BE REPORTED TO THE ENGINEER IMMEDIATELY.



02 October 2026
NGR: 555,580 E / 287,806 N

Project No. 3491675
Client: Heatons
Drawn by: MT
Ref: PDD 1

Envireau

© Crown Copyright. All rights reserved. Licence number: 100050062.

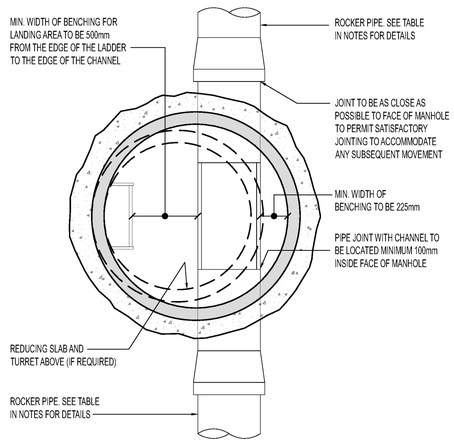

TYPICAL PLAN OVER MANHOLE TYPE Y

(SCALE 1:25)

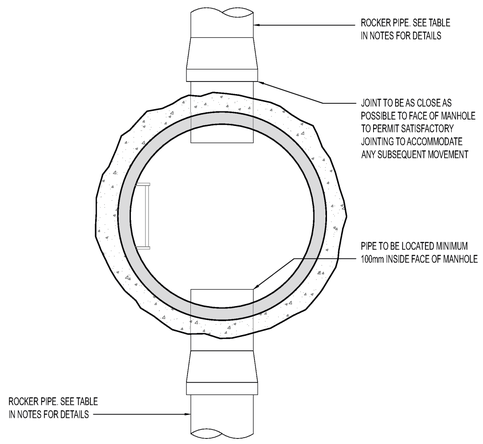

TYPICAL PLAN OVER MANHOLE TYPE Z

(SCALE 1:25)

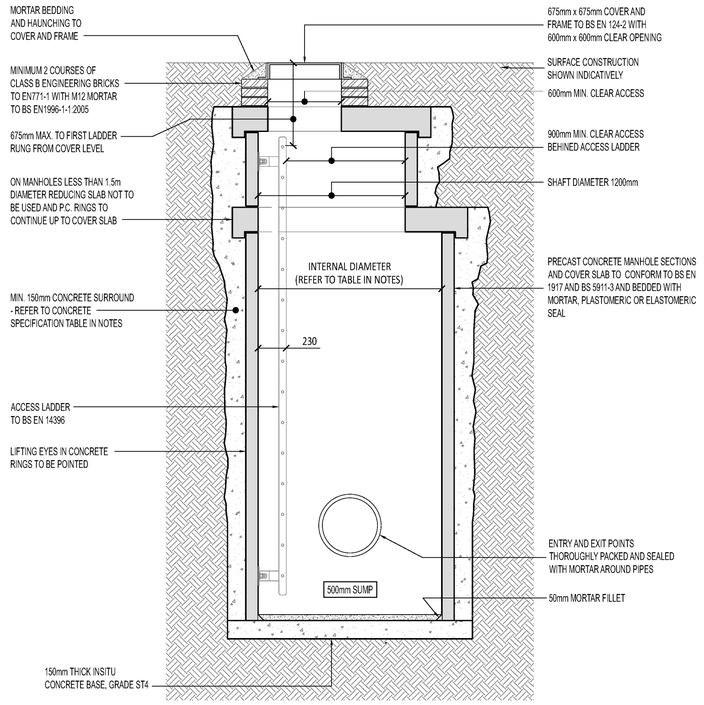

PRIVATE MANHOLE DETAIL TYPE Y

DEPTH FROM COVER LEVEL TO SOFFIT OF PIPE 3.0m - 6.0m

(SCALE 1:25)

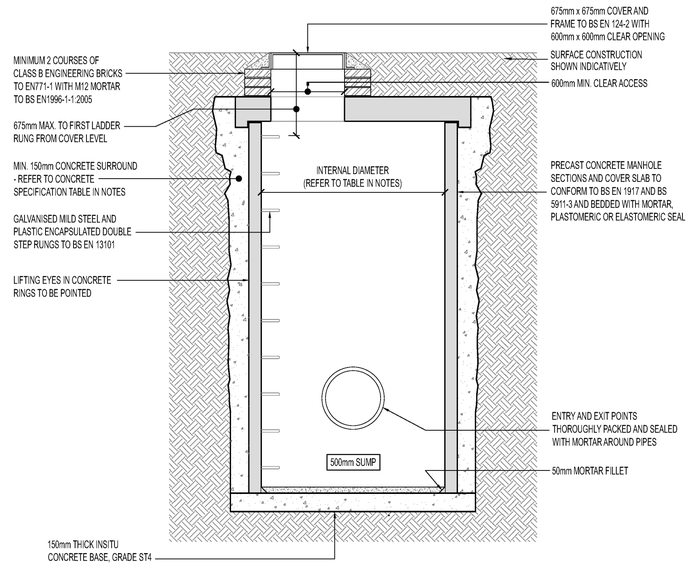

PRIVATE MANHOLE DETAIL TYPE Z (WITH SUMP)

DEPTH FROM COVER LEVEL TO SOFFIT OF PIPE 1.5m - 3.0m

(SCALE 1:25)

PRIVATE DRAINAGE DETAIL NOTES.

ALL WORK TO PRIVATE SEWERS IS TO BE UNDERTAKEN IN ACCORDANCE WITH THE CURRENT BRITISH STANDARDS, BUILDING REGULATIONS AND EUROCODES.

THE CONTRACTOR SHALL BE RESPONSIBLE FOR CHECKING THE EXISTING LINE, INVERT LEVEL AND PIPE DIAMETER OF THE EXISTING CONNECTION POINTS FOR BOTH THE FOUL AND SURFACE WATER SYSTEMS, PRIOR TO UNDERTAKING INSTALLATION OF ANY NEW DRAINAGE WORKS. ANY DEVIATION TO THE LEVELS AND POSITIONS INDICATED ON THE DRAWING SHOULD BE BROUGHT TO THE IMMEDIATE ATTENTION OF THE PROJECT ENGINEER.

FOR DETAILS OF GROUND CONDITIONS REFER TO THE GROUND INVESTIGATION REPORT.

THE FOLLOWING PIPE STRENGTHS SHALL BE ADOPTED UNLESS NOTED OTHERWISE:-

PRIVATE PIPES UP TO AND INCLUDING 300mm DIAMETER TO BE CLAY WARE TO BSEN295 CLASS 160 OR PLASTIC TO BS EN 1401-1:2009 AND BS EN 13598.

PRIVATE PIPES OVER 300mm DIAMETER TO BE CONCRETE TO BS5911 CLASS M.

WHERE PIPES AND OTHER DRAINAGE COMPONENTS ARE TO RECEIVE TRADE EFFLUENT THE PRINCIPAL CONTRACTOR SHALL ENSURE THEY ARE ADEQUATE TO RECEIVE THE DISPOSAL OF CHEMICALS AS LISTED IN THE CONTRACT DOCUMENTS.

ALL PIPE RUNS TO BE LAID WITH FLEXIBLE JOINTS.

PIPES LOCATED IN HIGHWAYS TO BE LAID A MINIMUM OF 1m FROM THE KERB EDGE.

ALL PIPES ENTERING AND EXITING MANHOLES ARE TO BE CONNECTED WITH PIPE SOFFITS LEVEL UNLESS NOTED OTHERWISE.

ALL INVERTS SPECIFIED ARE OUTGOING (EXCEPT BACKDROP)

CONNECTIONS TO BE MADE BY PURPOSE MADE JUNCTIONS AS FAR AS PRACTICABLE, OR USING PIPE BENDS TO BE TURNED IN DIRECTION OF FLOW.

ALL DRAINS TO BE PRESSURE TESTED PRIOR TO BACKFILLING, AND UPON COMPLETION OF SURFACING. ALL DRAINS TO BE INSPECTED BY CCTV IMMEDIATELY PRIOR TO PRACTICAL COMPLETION.

PRE-FORMED CHANNELS ARE TO BE USED IN MANHOLES WHERE APPLICABLE.

GRANOLITHIC CONCRETE BENCHING TO BE STEEL TROWELLED TO A DENSE SMOOTH FACE NEATLY SHAPED AND FINISHED TO ALL BRANCH CONNECTIONS.

THE FIRST MANHOLE UPSTREAM FROM THE CONNECTION TO THE CONNECTION TO THE EXISTING DRAINAGE SHOULD BE FITTED WITH A SCREEN IN ORDER TO PREVENT DEBRIS ENTERING THE EXISTING SEWER/DRAIN. THE SCREEN SHOULD NOT BE REMOVED UNTIL IMMEDIATELY PRIOR TO THE OCCUPATION OF THE PREMISES TO BE SERVED BY THE SEWER.

ROAD GULLY CONNECTIONS TO BE 150mm DIAMETER LAID AT A MINIMUM GRADIENT OF 1:150 UNLESS NOTED OTHERWISE.

ALL DRAINAGE WORKS WITHIN THE ZONE OF INFLUENCE OF TREES ARE TO BE CONSTRUCTED IN ACCORDANCE WITH THE NHBC STANDARDS.

ALL BYPASS INTERCEPTORS ARE TO BE INSTALLED STRICTLY IN ACCORDANCE WITH MANUFACTURERS RECOMMENDATIONS.

CONCRETE MIXES

THE FOLLOWING CONCRETE MIXES ARE TO BE USED (IN ACCORDANCE WITH BS 8500) :-

CONCRETE SPECIFICATION	
DC-CLASS	CONCRETE MIX
DC1	ST4 / GEN 3
DC2	FND 2
DC2;	FND 2;
DC3	FND 3
DC3;	FND 3;
DC4	FND 4
DC4;	FND 4;
DC4..	FND 4..
SUMP CLASS S3 FOR ALL DRAINAGE WORKS	

MANHOLE COVER REQUIREMENTS

ALL COVERS TO BE IN ACCORDANCE WITH BS EN 124. MATERIAL AND COVER TYPE TO SUIT ARCHITECTURAL FINISHES.

LOAD CLASS REQUIREMENTS	
LOCATION	CLASS
REAR GARDENS	A15
FRONT GARDENS	B125
FOOTPATHS / PRIVATE DRIVES	B125
PARKING AREAS / CARRIAGEWAYS	D400

ROCKER PIPE REQUIREMENTS

ROCKER PIPE TABLE	
PIPE DIAMETER (mm)	ROCKER PIPE LENGTH (mm)
150-600	600
675-750	1000
OVER 750	1250

MANHOLE CHAMBER DIAMETER

MANHOLE CHAMBER SIZES	
DIA. OF LARGER PIPE IN MH	INTERNAL CHAMBER DIA. (mm)
LESS THAN 375mm	1200
375mm-750mm	1500
750mm-900mm	1800
GREATER THAN 900mm	PIPE DIA. + 900

TRENCH WIDTH REQUIREMENTS

TRENCH WIDTHS TABLE	
DIAMETER OF DRAIN (mm)	TRENCH WIDTH (mm)
100	550
150	600
225	700
300	750

FP McCann
Cadeby, Leicestershire

PRIVATE DRAINAGE DETAILS SHEET 2

CONTRACTUAL RESIDUAL CDM RISKS

RISK ITEM	MITIGATION MEASURES BY CONTRACTOR
CLOSE PROXIMITY OF TREES.	ALL NECESSARY PRECAUTIONS TO BE TAKEN WHEN CRANING.
EXISTING ON SITE / CROSS SITE SERVICES.	LOCATE, DEMARK AND PROTECT OR MAKE SAFE ALL EXISTING ON SITE / CROSS SITE SERVICES PRIOR TO THE COMMENCEMENT OF ANY WORKS.
LIVE SITE	CONTRACTOR TO PROVIDE PROTECTION TO PREVENT UNAUTHORISED ACCESS TO THE CONSTRUCTION AREA & ANY OPEN EXCAVATIONS.
EXISTING ROAD	CARE TO BE TAKEN NOT TO UNDERMINE EXISTING ROAD AND PAVEMENT GIVEN THE PROXIMITY OF REQUIRED EXCAVATIONS.

Rev.	Date	Revision Description	Drawn	Auth'd
C01	02.10.26	FIRST ISSUE	MT	LC

Notes:

1. DO NOT SCALE THIS DRAWING. THE CONTRACTOR SHALL VERIFY ALL DIMENSIONS AND EXISTING CONDITIONS ON SITE PRIOR TO COMMENCING THE WORKS.
2. THIS DRAWING IS TO BE READ IN CONJUNCTION WITH ALL RELEVANT ARCHITECTS, ENGINEERS AND SPECIALISTS DRAWINGS AND SPECIFICATIONS.
3. ALL DIMENSIONS IN MILLIMETRES UNLESS NOTED OTHERWISE. ALL LEVELS IN METRES UNLESS NOTED OTHERWISE.
4. ANY DISCREPANCIES NOTED ON SITE ARE TO BE REPORTED TO THE ENGINEER IMMEDIATELY.

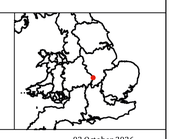

02 October 2026

NGR: 555,580 E / 287,806 N

Project No. 3491675
Client: Heatons
Drawn by: MT
Ref: PDD 2

Envireau

© Crown Copyright. All rights reserved. Licence number: 100050002.

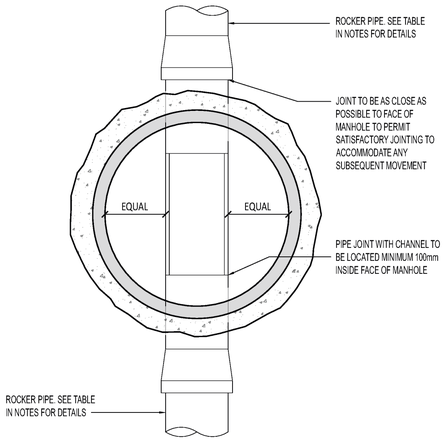

TYPICAL PLAN OVER MANHOLE TYPE W

(SCALE 1:25)

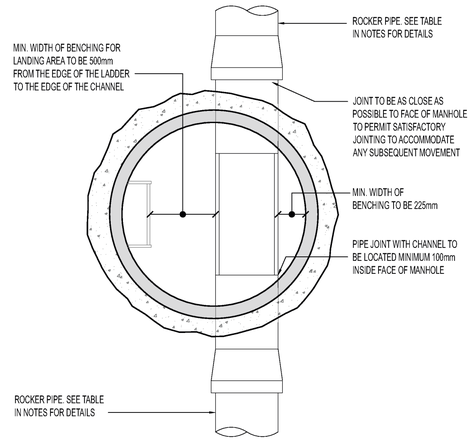

TYPICAL PLAN OVER MANHOLE TYPE X

(SCALE 1:25)

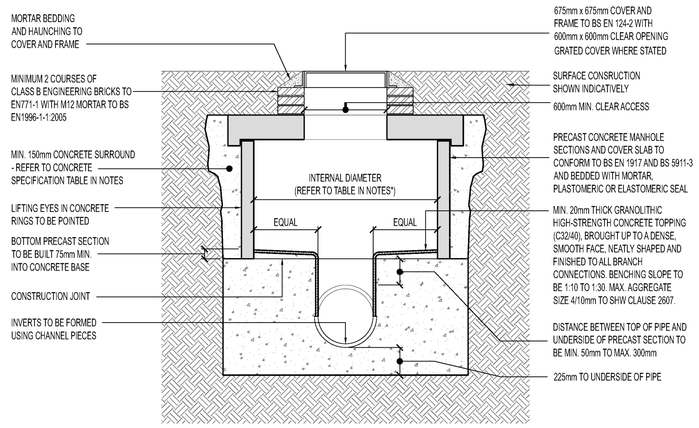

PRIVATE MANHOLE DETAIL TYPE W

DEPTH FROM COVER LEVEL TO SOFFIT OF PIPE 0.75m - 1.5m

(SCALE 1:25)

* MIN. INTERNAL CHAMBER DIAMETER TO BE 1200mm TO ACCOMMODATE 600mm x 600mm ACCESS OPENING. SUBJECT TO A SAFE SYSTEM OF WORK BEING PUT IN PLACE.

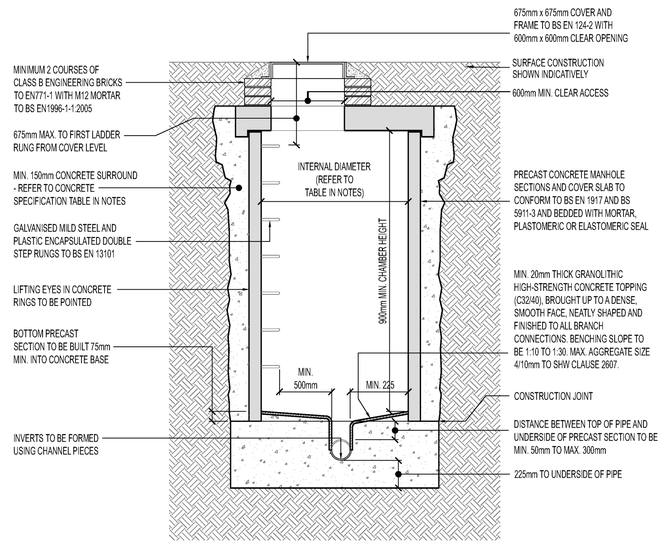

PRIVATE MANHOLE DETAIL TYPE X

DEPTH FROM COVER LEVEL TO SOFFIT OF PIPE 1.5m - 3.0m

(SCALE 1:25)

PRIVATE DRAINAGE DETAIL NOTES.

ALL WORK TO PRIVATE SEWERS IS TO BE UNDERTAKEN IN ACCORDANCE WITH THE CURRENT BRITISH STANDARDS, BUILDING REGULATIONS AND EUROCODES.

THE CONTRACTOR SHALL BE RESPONSIBLE FOR CHECKING THE EXISTING LINE, INVERT LEVEL AND PIPE DIAMETER OF THE EXISTING CONNECTION POINTS FOR BOTH THE FOUL AND SURFACE WATER SYSTEMS, PRIOR TO UNDERTAKING INSTALLATION OF ANY NEW DRAINAGE WORKS. ANY DEVIATION TO THE LEVELS AND POSITIONS INDICATED ON THE DRAWING SHOULD BE BROUGHT TO THE IMMEDIATE ATTENTION OF THE PROJECT ENGINEER.

FOR DETAILS OF GROUND CONDITIONS REFER TO THE GROUND INVESTIGATION REPORT.

THE FOLLOWING PIPE STRENGTHS SHALL BE ADOPTED UNLESS NOTED OTHERWISE:-

PRIVATE PIPES UP TO AND INCLUDING 300mm DIAMETER TO BE CLAY WARE TO BSEN295 CLASS 160 OR PLASTIC TO BS EN 1401-1:2009 AND BS EN 13598.

PRIVATE PIPES OVER 300mm DIAMETER TO BE CONCRETE TO BS5911 CLASS M.

WHERE PIPES AND OTHER DRAINAGE COMPONENTS ARE TO RECEIVE TRADE EFFLUENT THE PRINCIPAL CONTRACTOR SHALL ENSURE THEY ARE ADEQUATE TO RECEIVE THE DISPOSAL OF CHEMICALS AS LISTED IN THE CONTRACT DOCUMENTS.

ALL PIPE RUNS TO BE LAID WITH FLEXIBLE JOINTS.

PIPES LOCATED IN HIGHWAYS TO BE LAID A MINIMUM OF 1m FROM THE KERB EDGE.

ALL PIPES ENTERING AND EXITING MANHOLES ARE TO BE CONNECTED WITH PIPE SOFFITS LEVEL UNLESS NOTED OTHERWISE.

ALL INVERTS SPECIFIED ARE OUTGOING (EXCEPT BACKDROP)

CONNECTIONS TO BE MADE BY PURPOSE MADE JUNCTIONS AS FAR AS PRACTICABLE, OR USING PIPE BENDS TO BE TURNED IN DIRECTION OF FLOW.

ALL DRAINS TO BE PRESSURE TESTED PRIOR TO BACKFILLING, AND UPON COMPLETION OF SURFACING. ALL DRAINS TO BE INSPECTED BY CCTV IMMEDIATELY PRIOR TO PRACTICAL COMPLETION.

PRE-FORMED CHANNELS ARE TO BE USED IN MANHOLES WHERE APPLICABLE.

GRANOLITHIC CONCRETE BENCHING TO BE STEEL TROWELLED TO A DENSE SMOOTH FACE NEATLY SHAPED AND FINISHED TO ALL BRANCH CONNECTIONS.

THE FIRST MANHOLE UPSTREAM FROM THE CONNECTION TO THE CONNECTION TO THE EXISTING DRAINAGE SHOULD BE FITTED WITH A SCREEN IN ORDER TO PREVENT DEBRIS ENTERING THE EXISTING SEWER/DRAIN. THE SCREEN SHOULD NOT BE REMOVED UNTIL IMMEDIATELY PRIOR TO THE OCCUPATION OF THE PREMISES TO BE SERVED BY THE SEWER.

ROAD GULLY CONNECTIONS TO BE 150mm DIAMETER LAID AT A MINIMUM GRADIENT OF 1:150 UNLESS NOTED OTHERWISE.

ALL DRAINAGE WORKS WITHIN THE ZONE OF INFLUENCE OF TREES ARE TO BE CONSTRUCTED IN ACCORDANCE WITH THE NHBC STANDARDS.

ALL BYPASS INTERCEPTORS ARE TO BE INSTALLED STRICTLY IN ACCORDANCE WITH MANUFACTURERS RECOMMENDATIONS.

CONCRETE MIXES

THE FOLLOWING CONCRETE MIXES ARE TO BE USED (IN ACCORDANCE WITH BS 8500) -

CONCRETE SPECIFICATION	
DC-CLASS	CONCRETE MIX
DC1	ST4 / GEN 3
DC2	FND 2
DC2$_f$	FND 2$_f$
DC3	FND 3
DC3$_f$	FND 3$_f$
DC4	FND 4
DC4$_f$	FND 4$_f$
DC4$_m$	FND 4$_m$
SUMP CLASS S3 FOR ALL DRAINAGE WORKS	

MANHOLE COVER REQUIREMENTS

ALL COVERS TO BE IN ACCORDANCE WITH BS EN 124. MATERIAL AND COVER TYPE TO SUIT ARCHITECTURAL FINISHES.

LOAD CLASS REQUIREMENTS	
LOCATION	CLASS
REAR GARDENS	A15
FRONT GARDENS	B125
FOOTPATHS / PRIVATE DRIVES	B125
PARKING AREAS / CARRIAGEWAYS	D400

ROCKER PIPE REQUIREMENTS

ROCKER PIPE TABLE	
PIPE DIAMETER (mm)	ROCKER PIPE LENGTH (mm)
150-600	600
675-750	1000
OVER 750	1250

MANHOLE CHAMBER DIAMETER

MANHOLE CHAMBER SIZES	
DIA. OF LARGER PIPE IN MH	INTERNAL CHAMBER DIA. (mm)
LESS THAN 375mm	1200
375mm-700mm	1500
750mm-900mm	1800
GREATER THAN 900mm	PIPE DIA. + 900

TRENCH WIDTH REQUIREMENTS

TRENCH WIDTHS TABLE	
DIAMETER OF DRAIN (mm)	TRENCH WIDTH (mm)
100	550
150	600
225	700
300	750

FP McCann
Cadeby, Leicestershire

PRIVATE DRAINAGE DETAILS SHEET 3

CONTRACTUAL RESIDUAL CDM RISKS

RISK ITEM	MITIGATION MEASURES BY CONTRACTOR
CLOSE PROXIMITY OF TREES.	ALL NECESSARY PRECAUTIONS TO BE TAKEN WHEN CRANING.
EXISTING ON SITE / CROSS SITE SERVICES.	LOCATE, DEMARK AND PROTECT OR MAKE SAFE ALL EXISTING ON SITE / CROSS SITE SERVICES PRIOR TO THE COMMENCEMENT OF ANY WORKS.
LIVE SITE	CONTRACTOR TO PROVIDE PROTECTION TO PREVENT UNAUTHORISED ACCESS TO THE CONSTRUCTION AREA & ANY OPEN EXCAVATIONS.
EXISTING ROAD	CARE TO BE TAKEN NOT TO UNDERMINE EXISTING ROAD AND PAVEMENT GIVEN THE PROXIMITY OF REQUIRED EXCAVATIONS.

Rev.	Date	Revision Description	Drawn	Auth'd
C01	02.10.26	FIRST ISSUE	MT	LC

Notes:

1. DO NOT SCALE THIS DRAWING. THE CONTRACTOR SHALL VERIFY ALL DIMENSIONS AND EXISTING CONDITIONS ON SITE PRIOR TO COMMENCING THE WORKS.
2. THIS DRAWING IS TO BE READ IN CONJUNCTION WITH ALL RELEVANT ARCHITECTS, ENGINEERS AND SPECIALISTS DRAWINGS AND SPECIFICATIONS.
3. ALL DIMENSIONS IN MILLIMETRES UNLESS NOTED OTHERWISE. ALL LEVELS IN METRES UNLESS NOTED OTHERWISE.
4. ANY DISCREPANCIES NOTED ON SITE ARE TO BE REPORTED TO THE ENGINEER IMMEDIATELY.

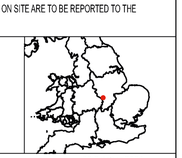

02 October 2026

NGR: 555,580 E / 287,806 N

Project No. 3491675
Client: Heatons
Drawn by: MT
Ref: PDD 2

Envireau

© Crown Copyright All rights reserved. Licence number: 100050002.

TYPICAL EARTHEN SWALE WEIR CROSS SECTION

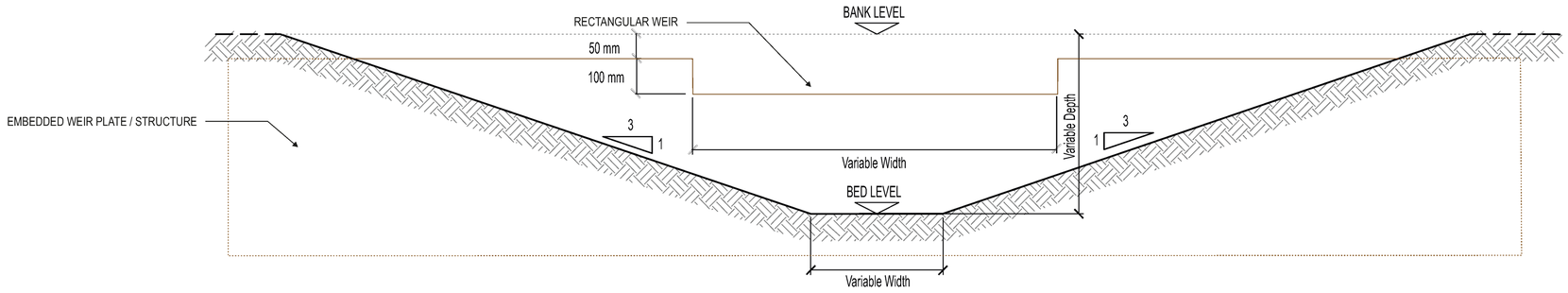

TYPICAL ORIFICE PLATE FLOW RESTRICTOR NOT TO SCALE

ISOMORPHIC VIEW

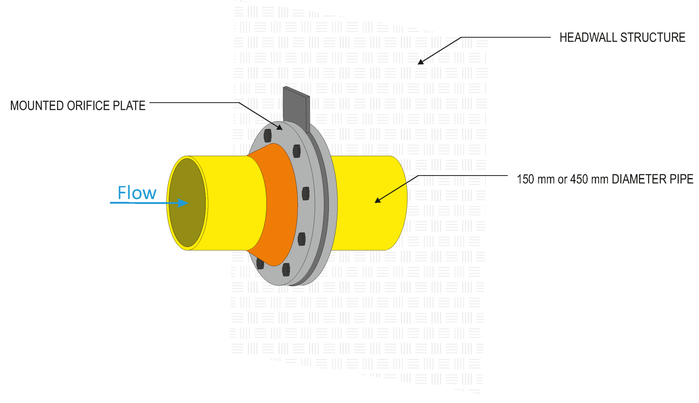

SIDE VIEW

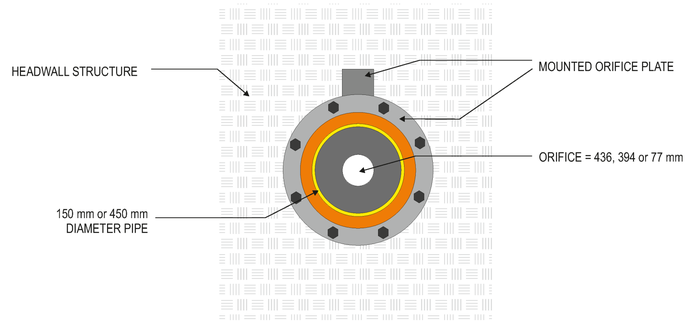

FP McCann
Cadeby, Leicestershire

TYPICAL SWALE WEIR & OUTFALL RESTRICTOR

CONTRACTUAL RESIDUAL CDM RISKS

RISK ITEM	MITIGATION MEASURES BY CONTRACTOR
CLOSE PROXIMITY OF TREES.	ALL NECESSARY PRECAUTIONS TO BE TAKEN WHEN CRANING.
EXISTING ON SITE / CROSS SITE SERVICES.	LOCATE. DEMARK AND PROTECT OR MAKE SAFE ALL EXISTING ON SITE / CROSS SITE SERVICES PRIOR TO THE COMMENCEMENT OF ANY WORKS.
LIVE SITE	CONTRACTOR TO PROVIDE PROTECTION TO PREVENT UNAUTHORISED ACCESS TO THE CONSTRUCTION AREA & ANY OPEN EXCAVATIONS.
EXISTING ROAD	CARE TO BE TAKEN NOT TO UNDERMINE EXISTING ROAD AND PAVEMENT GIVEN THE PROXIMITY OF REQUIRED EXCAVATIONS.

Rev.	Date	Revision Description	Drawn	Auth'd
C01	08.10.26	FIRST ISSUE	MT	LC

Notes:

1. DO NOT SCALE THIS DRAWING. THE CONTRACTOR SHALL VERIFY ALL DIMENSIONS AND EXISTING CONDITIONS ON SITE PRIOR TO COMMENCING THE WORKS.
2. THIS DRAWING IS TO BE READ IN CONJUNCTION WITH ALL RELEVANT ARCHITECTS, ENGINEERS AND SPECIALISTS DRAWINGS AND SPECIFICATIONS.
3. ALL DIMENSIONS IN MILLIMETRES UNLESS NOTED OTHERWISE. ALL LEVELS IN METRES UNLESS NOTED OTHERWISE.
4. ANY DISCREPANCIES NOTED ON SITE ARE TO BE REPORTED TO THE ENGINEER IMMEDIATELY.



08 October 2026

NGR: 443,349 E / 302,364 N

Project No. 3491675
Client: FP McCann
Drawn by: LC
Ref: Swale Weir and Outfall Restrictor

Envireau

© Crown Copyright. All rights reserved. Licence number: 100020082

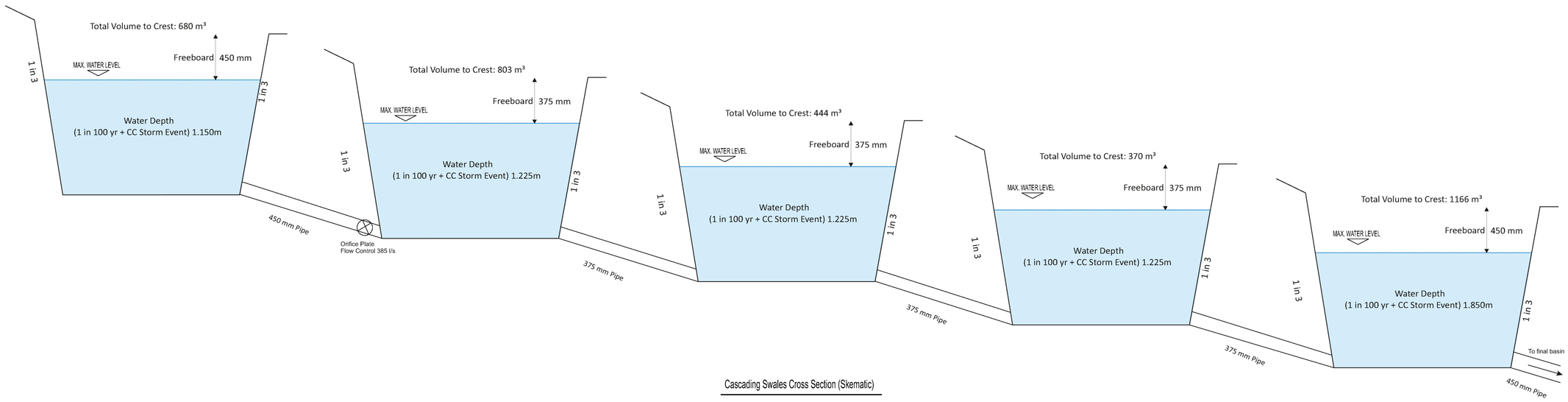

Cascading Swales Cross Section (Skematic)

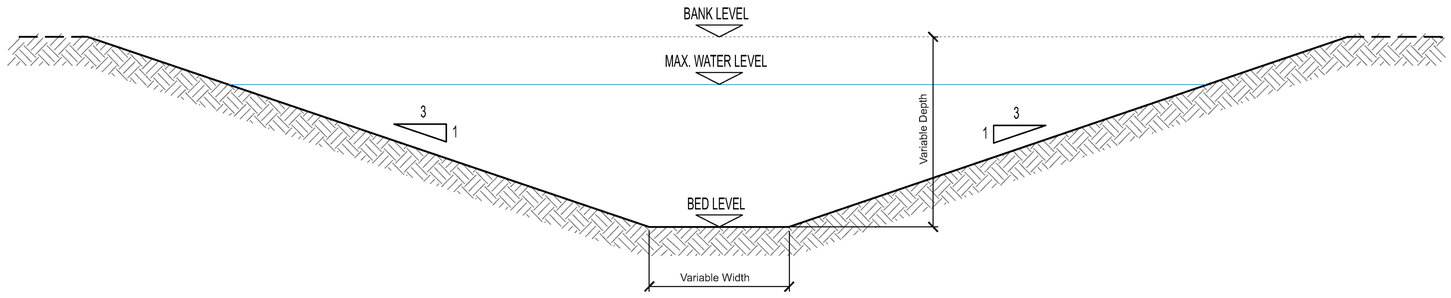

TYPICAL EARTHEN SWALE CROSS SECTION

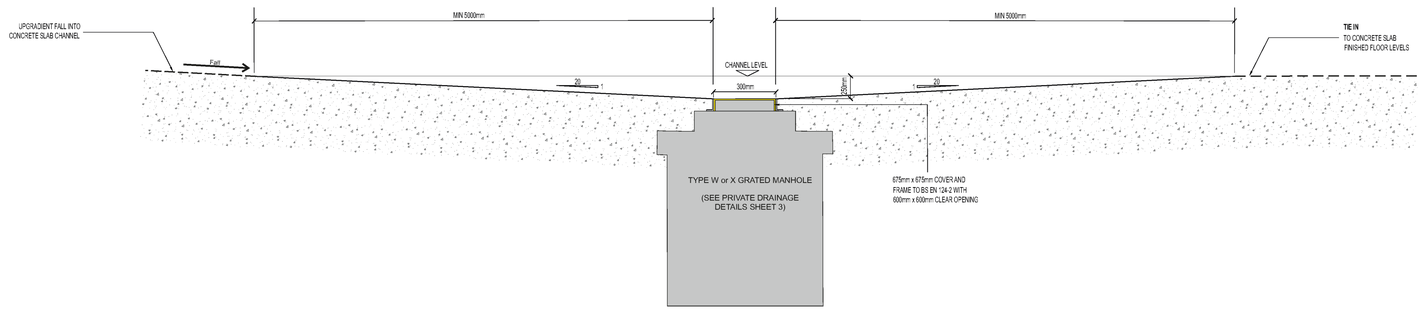

TYPICAL CONCRETE PAD SWALE CROSS SECTION WITH 0.3m WIDE BASE AT GRATE SCALE 1:25

FP McCann
Cadeby, Leicestershire

PROPOSED EARTHEN SWALE & CONCRETE SWALE DETAILS

CONTRACTUAL RESIDUAL CDM RISKS

RISK ITEM	MITIGATION MEASURES BY CONTRACTOR
CLOSE PROXIMITY OF TREES.	ALL NECESSARY PRECAUTIONS TO BE TAKEN WHEN CRANING.
EXISTING ON SITE / CROSS SITE SERVICES.	LOCATE, DEMARK AND PROTECT OR MAKE SAFE ALL EXISTING ON SITE / CROSS SITE SERVICES PRIOR TO THE COMMENCEMENT OF ANY WORKS.
LIVE SITE	CONTRACTOR TO PROVIDE PROTECTION TO PREVENT UNAUTHORISED ACCESS TO THE CONSTRUCTION AREA & ANY OPEN EXCAVATIONS.
EXISTING ROAD	CARE TO BE TAKEN NOT TO UNDERMINE EXISTING ROAD AND PAVEMENT GIVEN THE PROXIMITY OF REQUIRED EXCAVATIONS.

Rev.	Date	Revision Description	Drawn	Auth'd
C01	02.10.26	FIRST ISSUE	MT	LC

Notes:

1. DO NOT SCALE THIS DRAWING. THE CONTRACTOR SHALL VERIFY ALL DIMENSIONS AND EXISTING CONDITIONS ON SITE PRIOR TO COMMENCING THE WORKS.
2. THIS DRAWING IS TO BE READ IN CONJUNCTION WITH ALL RELEVANT ARCHITECTS, ENGINEERS AND SPECIALISTS DRAWINGS AND SPECIFICATIONS.
3. ALL DIMENSIONS IN MILLIMETRES UNLESS NOTED OTHERWISE. ALL LEVELS IN METRES UNLESS NOTED OTHERWISE.
4. ANY DISCREPANCIES NOTED ON SITE ARE TO BE REPORTED TO THE ENGINEER IMMEDIATELY.

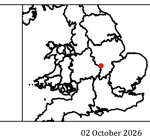

NOT TO SCALE

02 October 2026

NGR: 555,580 E / 287,806 N

Project No. 3491675
Client: Heatons
Drawn by: MT
Ref: PDD 1

Envireau

© Crown Copyright. All rights reserved. Licence number: 100019092.

Appendix D Hydraulic Modelling Results

© Envireau Ltd. 2026 \ 3491675 Heatons Cadeby Pipe Factory Discharge of Conditions \ RPT DoC 10,11 & 12

Precast Concrete Solutions

Headwalls

Drainage & Water Management








v.2.0

fpmccann.co.uk



FP McCann is the UK's market leader in the manufacture, supply and delivery of precast concrete solutions. Our comprehensive precast concrete business extends to include:

Drainage and Water Management Solutions • Tunnel and Shaft Solutions
Rail Solutions • Power and Infrastructure Solutions • Walling Solutions
Fencing Solutions • Modular Building Solutions • Agricultural Solutions
Flooring Solutions • Specialist Precast Solutions

Modern manufacturing plants at Alnwick (Northumberland), Byley (Cheshire), Cadeby (Warwickshire), Drakelow (Staffordshire), Ellistown (Leicestershire), Grantham (Lincolnshire), Lisnaskea (Northern Ireland), Littleport (Cambridgeshire), Lydney (Gloucestershire), Magherafelt (Northern Ireland), Telford (Shropshire) and Weston Underwood (Derbyshire) incorporate the latest computerised batching, distribution, casting, curing and handling systems and are operated by skilled and experienced workforces to ensure consistency of quality. Their geographical spread gives us an unrivalled ability to serve the construction industry throughout the UK and Ireland.

Introduction

FP McCann's precast concrete headwalls provide an ideal end connection point to outfall pipes into open watercourses such as rivers, culverts, collection and balancing ponds. They are a very efficient alternative to intrusive shuttering of soil embankments and costly on-site formwork with ready-mixed concrete, making them particularly suitable for use in hard to reach locations and in environmentally sensitive areas.

Where time constraints exist such as in tidal flow situations, concrete headwalls can be quickly positioned, secured and backfilled, providing immediate stability around the point of water discharge.

The FP McCann headwall range can accommodate pipe sizes from DN150 to DN2100 and is suitable for usage with box culverts. Additionally, accessories such as flap valves, penstocks, silt traps, handrails and safety grating can be built in as part of the specification.

A front weir wall can be fabricated onto any of the standard headwall range on request and installation is quick and easy.



Benefits

- **Headwalls are designed to EC2 and manufactured to BS EN 13369. (Full design calculations available to illustrate design assumptions).**
- **Prefabricated off-site**
- **Speedy and efficient to install**
- **Durable, long-lasting and low maintenance**
- **No on-site shuttering or formwork required**
- **Provides immediate stability and reduces soil erosion**
- **Valve and safety accessories available**
- **Cost-effective solution**
- **Significantly reduces the potential for floating debris to block the watercourse**
- **Installation with 2 or 3 lifting anchors**
- **Flap valves and grates available**
- **Reduces carbon footprint as no need to bring in lorries to site to pour in-situ**
- **The extended toe unit is available for all sizes making the entire headwall range compliant with Sewers for Adoption (SFA) and Sewers for Scotland**
- **The headwalls are considered to accord with the requirements indicated in Fig. C.5 (Typical Details) of Sewers for Adoption**

Key Site Safety Benefits

Safety hand rails can be used with our full range of headwalls. Health and safety risks are minimised because the construction work takes place off-site and installation is quick and easy.

Headwall Range - Quick Reference Guide

Headwall Range	Up to & including Pipe Sizes	Max Pipe O.D. mm	Page No.
HW Small 100	300	450	4
HW Small 150	300	450	4
HW Medium 100	450	630	5
HW Medium 150	450	630	5
HW Large 100	900	1130	6
HW Large 200	900	1130	6
HW XL-T1	1500	1800	7
HW XL-T2	1050	1350	8
HW XL-T3	675	950	9
HW XL-T4	375	550	10
HW XXL-T1	2100	2450	11
HW XXL-T2	1500	1800	12
HW XXL-T3	1050	1350	13
HW XXL-T4	525	800	14

Small
headwall

Pipe size: up to 300mm



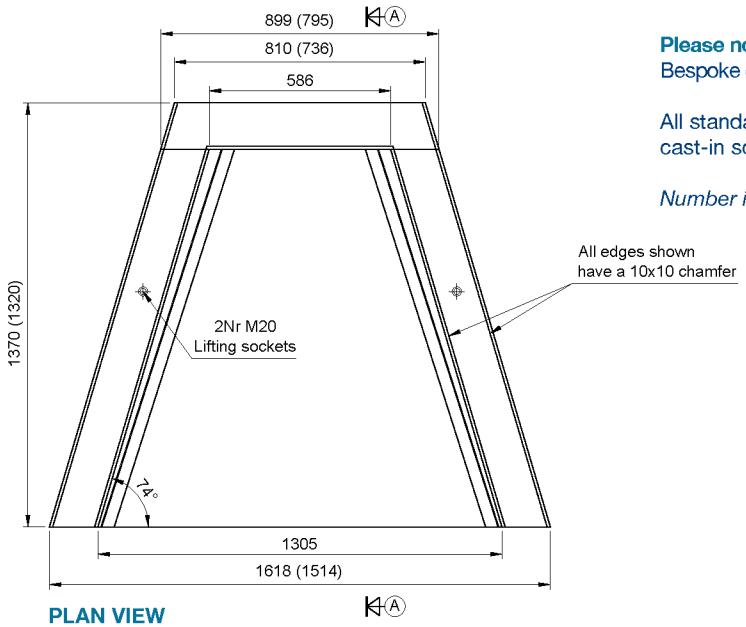

PLAN VIEW

Please note:
Bespoke grates and handrails are available upon request.

All standard headwalls are supplied complete with toe and 2 or 3 cast-in screw thread sockets and lifting loops.

Number in brackets relates to small headwall with 100mm wall.

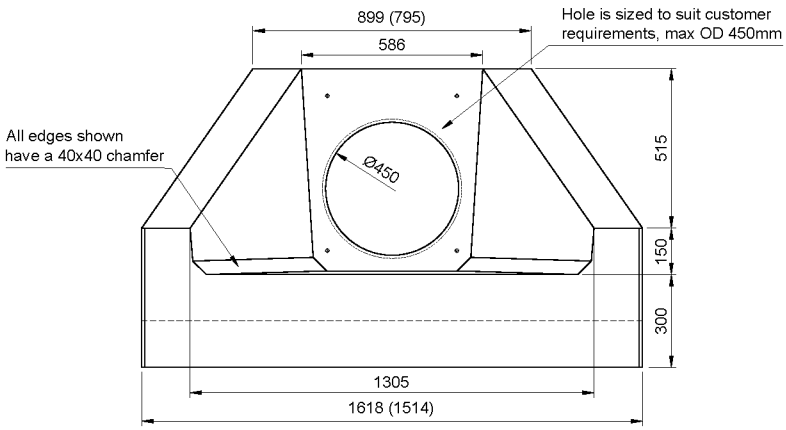

FRONT ELEVATION

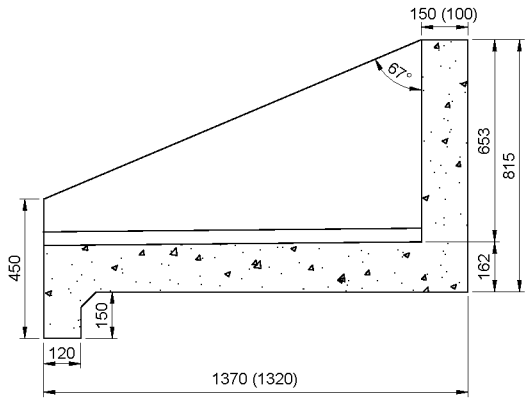

SECTION A-A

Headwall Range	Up to and including Pipe Sizes	Max Pipe O.D.	Back Wall Height (external)	Front Wall Height (external)	Backwall Width (internal)	Front Wall Width (internal)	Headwall Length	Standard invert level (variable)	Wall Thickness	Floor Thickness	Approx. weight kg
HW Small 100	300	450	815	450	586	1305	1320	100	100	162	1100
HW Small 150	300	450	815	450	586	1305	1370	100	150	162	1390

Medium
headwall

Pipe size: up to 450mm



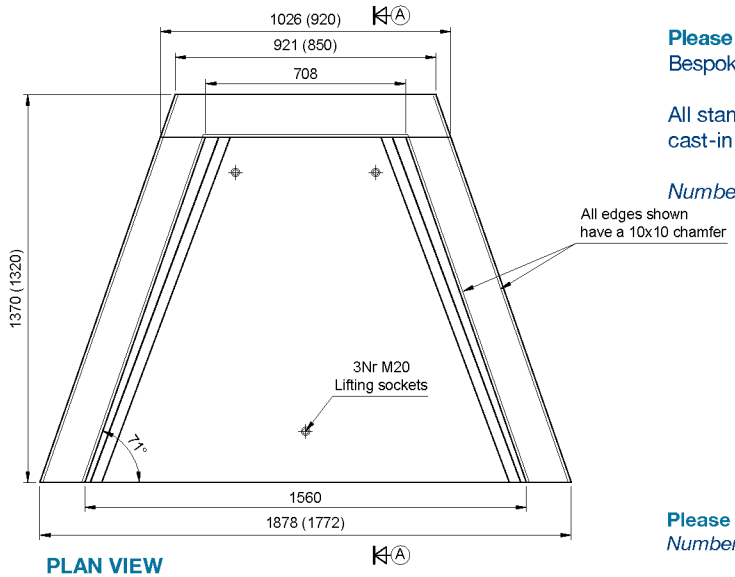

PLAN VIEW

Please note:
Bespoke grates and handrails are available upon request.

All standard headwalls are supplied complete with toe and 2 or 3 cast-in screw thread sockets and lifting loops.

Number in brackets relates to small headwall with 100mm wall.

Please note:
Number in brackets relates to medium headwall with 100mm wall.

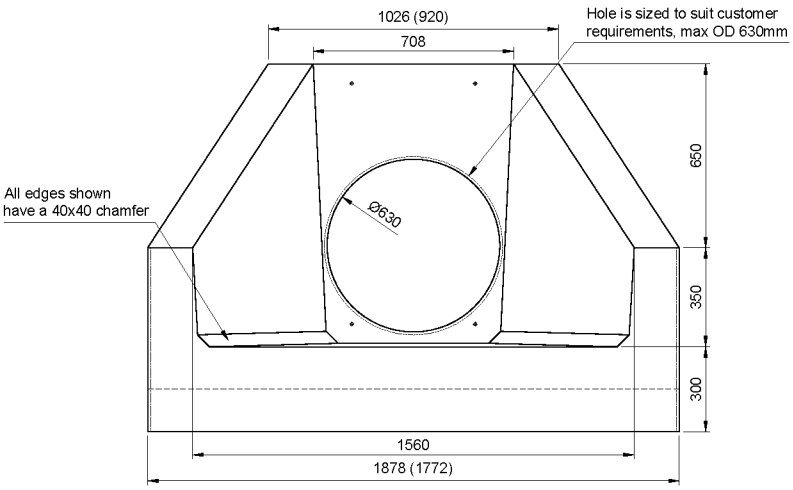

FRONT ELEVATION

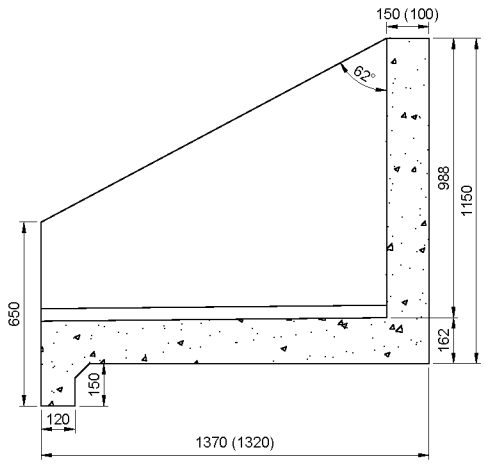

SECTION A-A

Headwall Range	Up to and including Pipe Sizes	Max Pipe O.D.	Back Wall Height (external)	Front Wall Height (external)	Backwall Width (internal)	Front Wall Width (internal)	Headwall Length	Standard invert level (variable)	Wall Thickness	Floor Thickness	Approx. weight kg
HW Med 100	450	630	1150	650	708	1560	1320	100	100	162	1540
HW Med 150	450	630	1150	650	708	1560	1370	100	150	162	2020

Large
headwall

Pipe size: up to 900mm



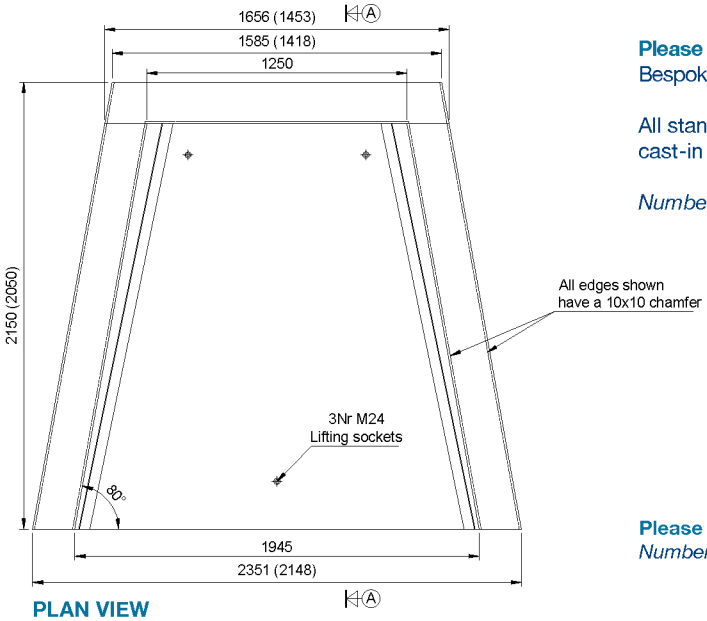

PLAN VIEW

Please note:
Bespoke grates and handrails are available upon request.

All standard headwalls are supplied complete with toe and 2 or 3 cast-in screw thread sockets and lifting loops.

Number in brackets relates to small headwall with 100mm wall.

Please note:
Number in brackets relates to large headwall with 100mm wall.

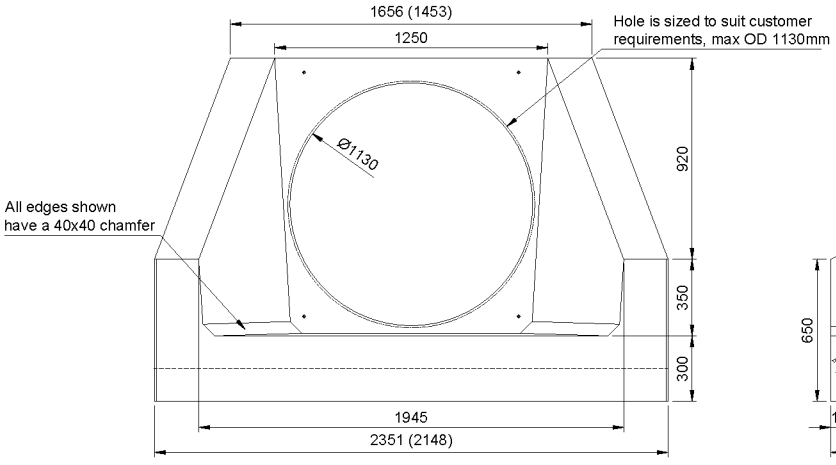

FRONT ELEVATION

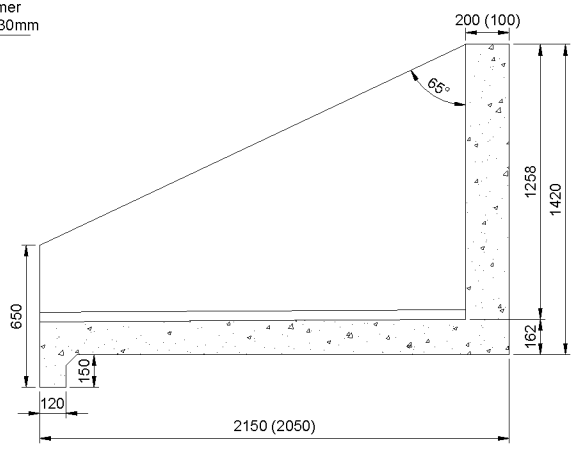

SECTION A-A

Headwall Range	Up to and including Pipe Sizes	Max Pipe O.D.	Back Wall Height (external)	Front Wall Height (external)	Backwall Width (internal)	Front Wall Width (internal)	Headwall Length	Standard invert level (variable)	Wall Thickness	Floor Thickness	Approx. weight kg
HW Large 100	900	1130	1420	650	1250	1945	2050	100	100	162	3020
HW Large 200	900	1130	1420	650	1250	1945	2150	100	200	162	4740

XL-T1
headwall

Pipe size: up to 1500mm



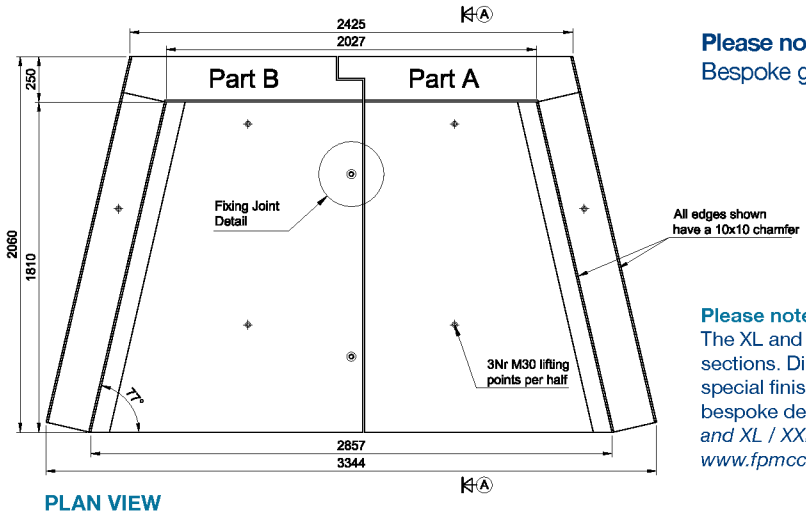

PLAN VIEW

Please note:
Bespoke grates and handrails are available upon request.

Please note:
The XL and XXL headwalls are manufactured and delivered in 2 sections. Dimensions represent a complete unit. Weir walls and other special finishes can be added to any of the headwalls as part of a bespoke design package. *Installation guides for standard Headwalls and XL / XXL Headwalls are available on our website: www.fpmccann.co.uk/headwalls*

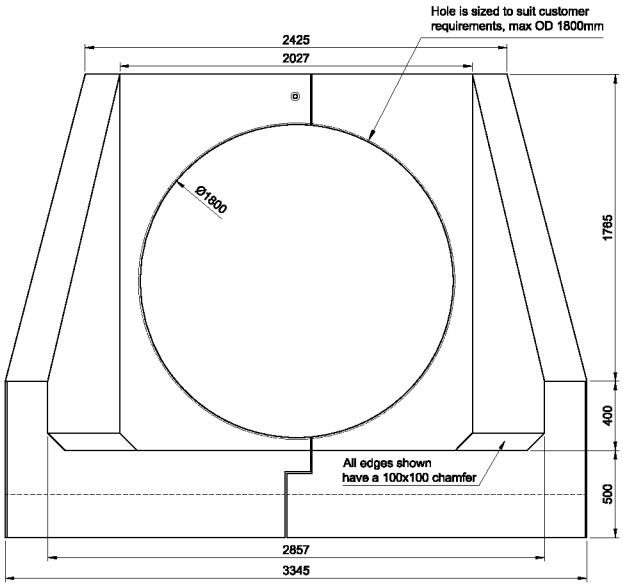

FRONT ELEVATION

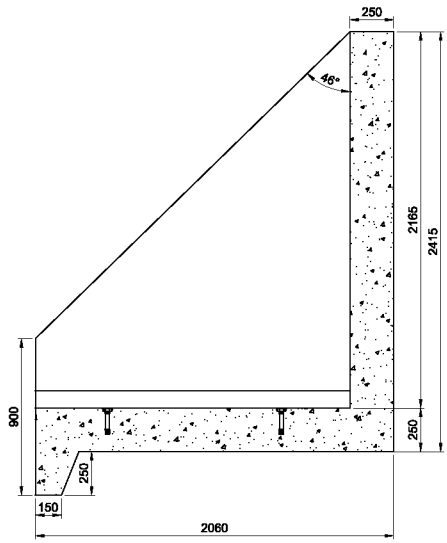

SECTION A-A

Headwall Range	Up to and including Pipe Sizes	Max Pipe O.D.	Back Wall Height (external)	Front Wall Height (external)	Backwall Width (internal)	Front Wall Width (internal)	Headwall Length	Standard invert level (variable)	Wall Thickness	Floor Thickness	Approx. weight kg
HW XL-T1	1500	1800	2415	900	2027	2857	2060	100	250	250	Part A 4725 Part B 4725

XL-T2
headwall

Pipe size: up to 1050mm



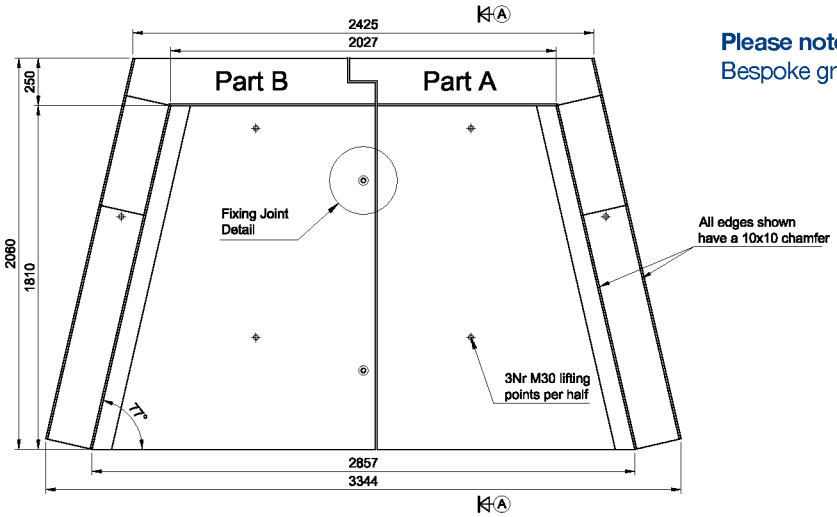

PLAN VIEW

Please note:
Bespoke grates and handrails are available upon request.

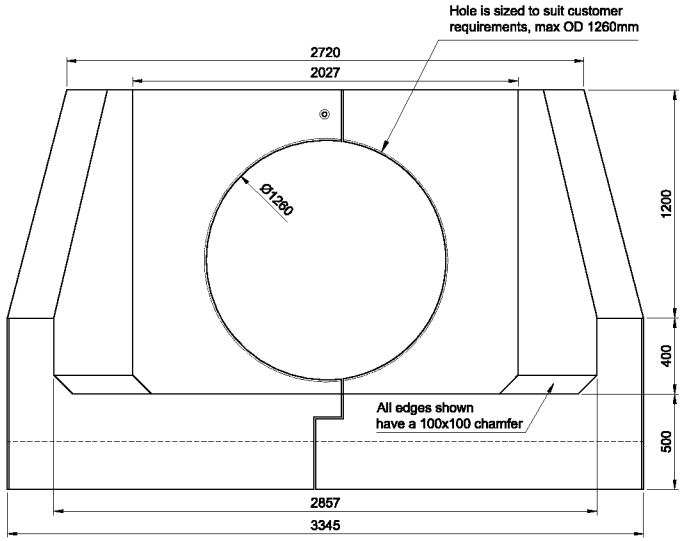

FRONT ELEVATION

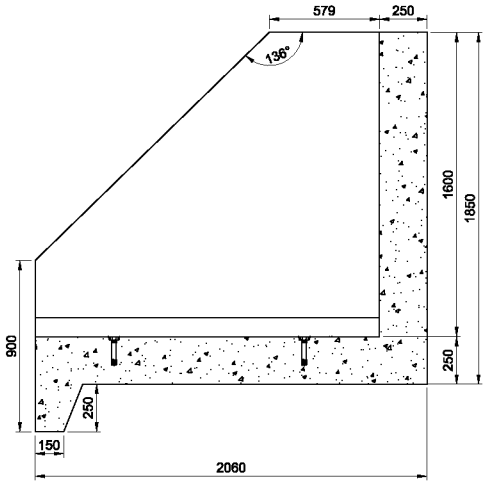

SECTION A-A

Headwall Range	Up to and including Pipe Sizes	Max Pipe O.D.	Back Wall Height (external)	Front Wall Height (external)	Backwall Width (internal)	Front Wall Width (internal)	Headwall Length	Standard invert level (variable)	Wall Thickness	Floor Thickness	Approx. weight kg
HW XL-T2	1050	1260	1850	900	2027	2857	2060	100	250	250	Part A 4095 Part B 4095

XL-T3
headwall

Pipe size: up to 675mm



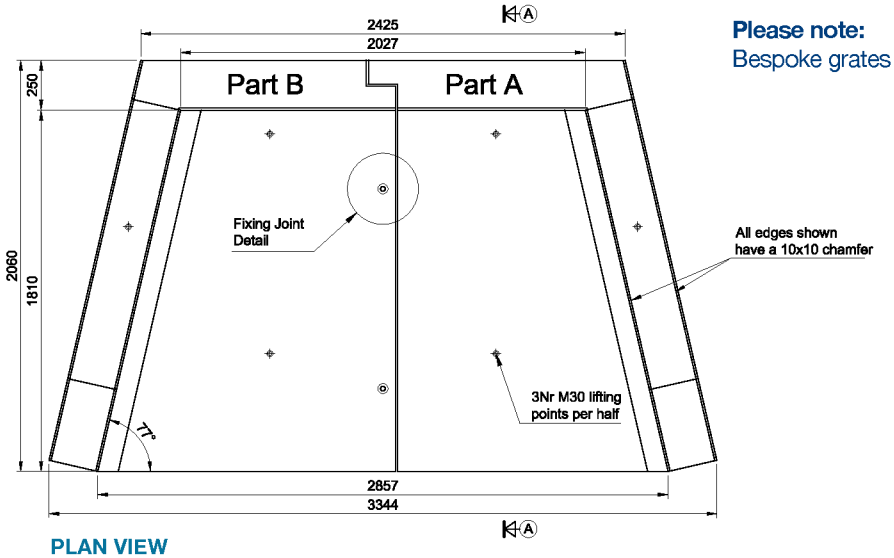

PLAN VIEW

Please note:
Bespoke grates and handrails are available upon request.

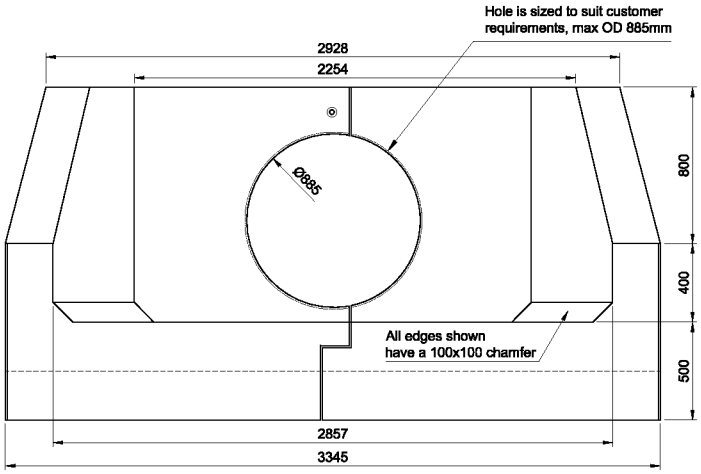

FRONT ELEVATION

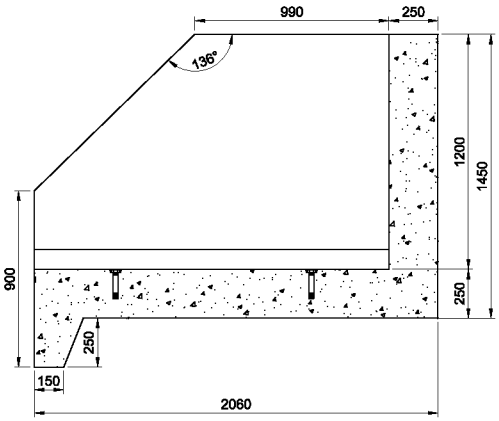

SECTION A-A

Headwall Range	Up to and including Pipe Sizes	Max Pipe O.D.	Back Wall Height (external)	Front Wall Height (external)	Backwall Width (internal)	Front Wall Width (internal)	Headwall Length	Standard invert level (variable)	Wall Thickness	Floor Thickness	Approx. weight kg
HW XL-T3	675	885	1450	900	2027	2857	2060	100	250	250	Part A 3465 Part B 3465

XL-T4
headwall

Pipe size: up to 375mm



Please note:
Bespoke grates and handrails are available upon request.

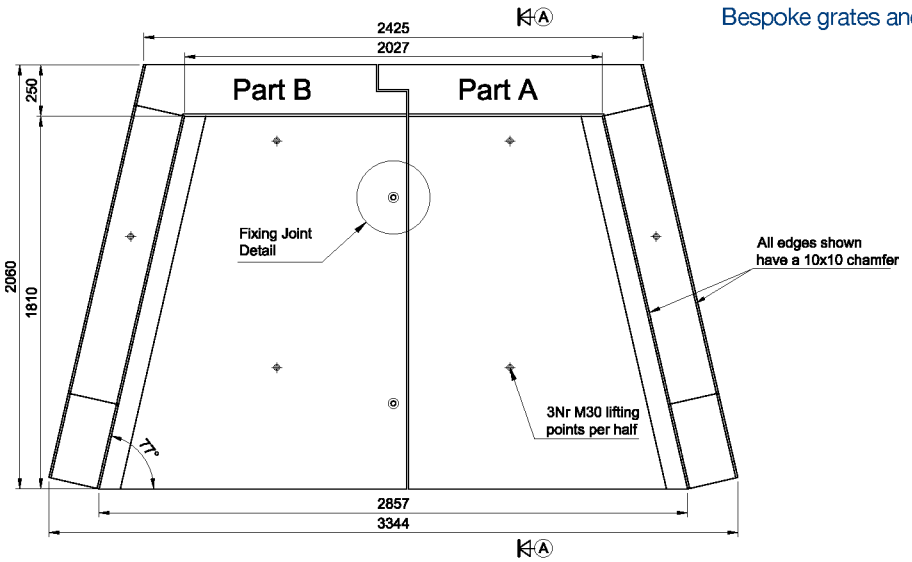

PLAN VIEW

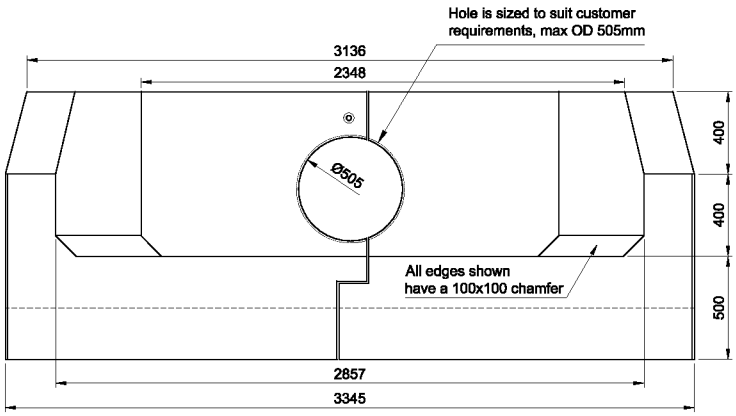

FRONT ELEVATION

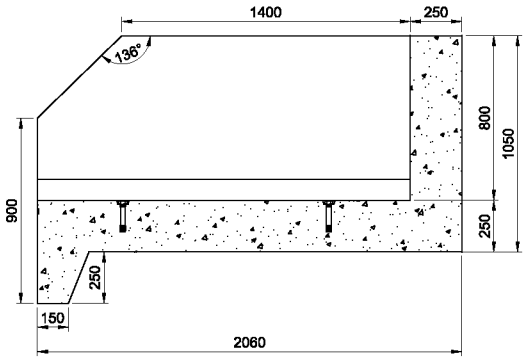

SECTION A-A

Headwall Range	Up to and including Pipe Sizes	Max Pipe O.D.	Back Wall Height (external)	Front Wall Height (external)	Backwall Width (internal)	Front Wall Width (internal)	Headwall Length	Standard invert level (variable)	Wall Thickness	Floor Thickness	Approx. weight kg
HW XL-T4	375	505	1050	900	2027	2857	2060	100	250	250	Part A 2646 Part B 2646

XXL T1
headwall

Pipe size: up to 2100mm

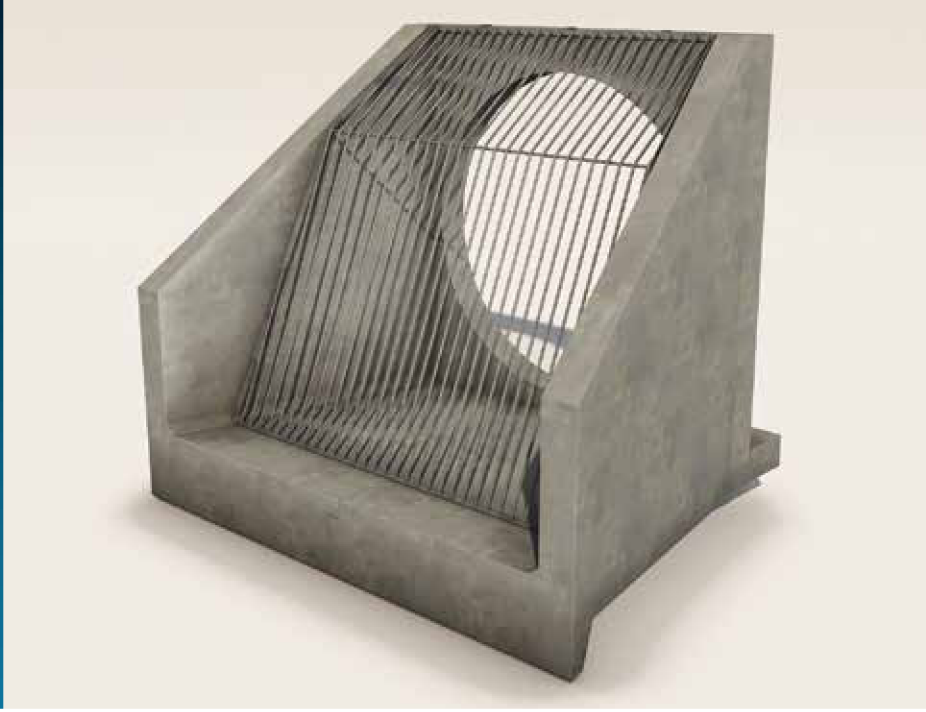

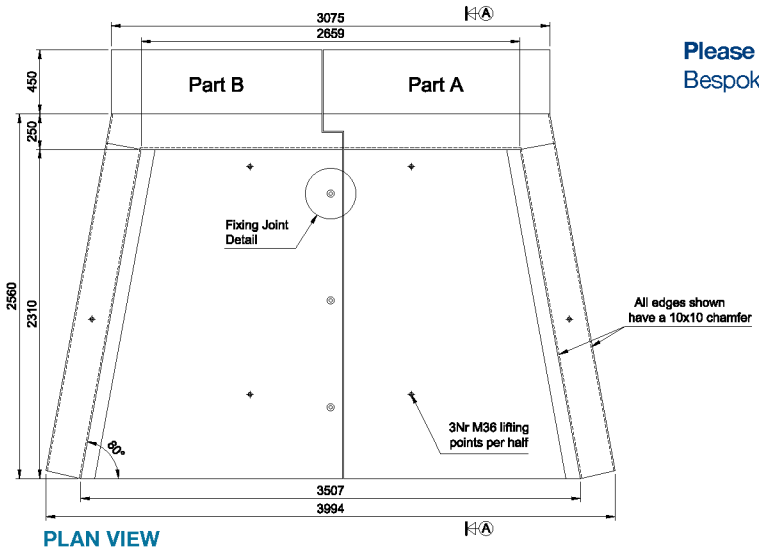

PLAN VIEW

Please note:
Bespoke grates and handrails are available upon request.

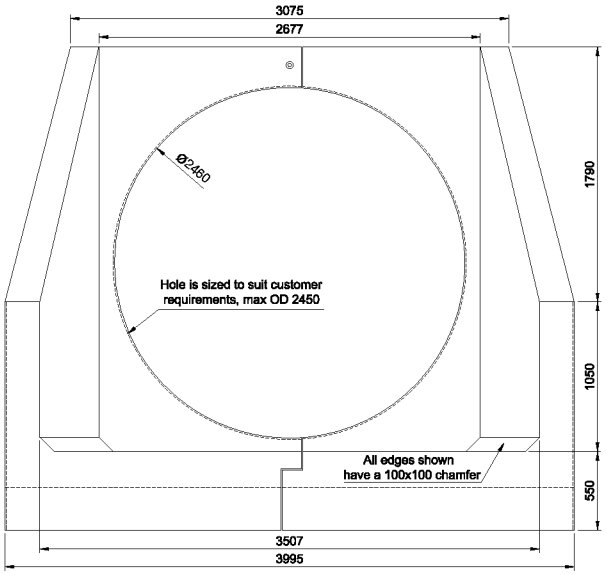

FRONT ELEVATION

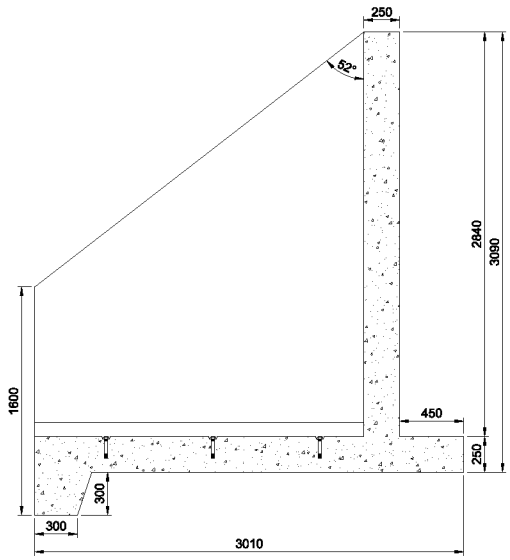

SECTION A-A

Headwall Range	Up to and including Pipe Sizes	Max Pipe O.D.	Back Wall Height (external)	Front Wall Height (external)	Backwall Width (internal)	Front Wall Width (internal)	Headwall Length	Standard invert level (variable)	Wall Thickness	Floor Thickness	Approx. weight kg
HW XXL-T1	2100	2460	3090	1600	2659	3507	3010	100	250	250	Part A 10,150 Part B 10,150

XXL-T2
headwall

Pipe size: up to 1500mm

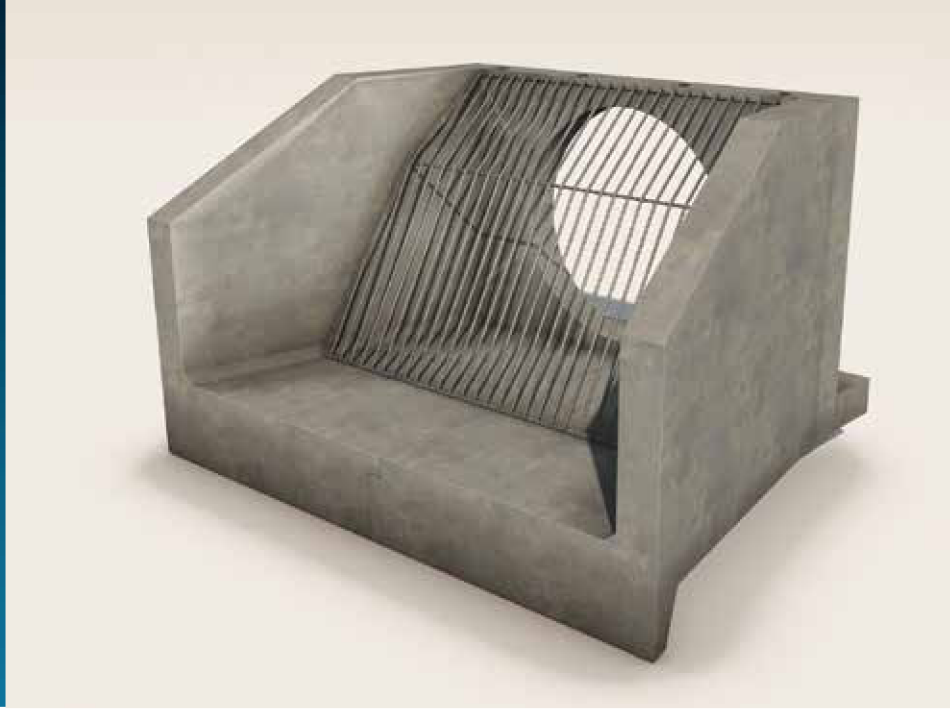

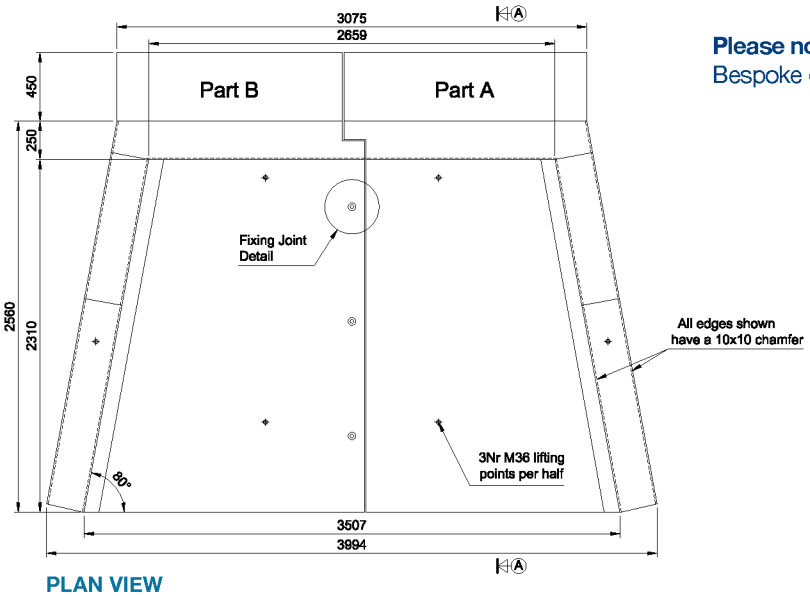

PLAN VIEW

Please note:
Bespoke grates and handrails are available upon request.

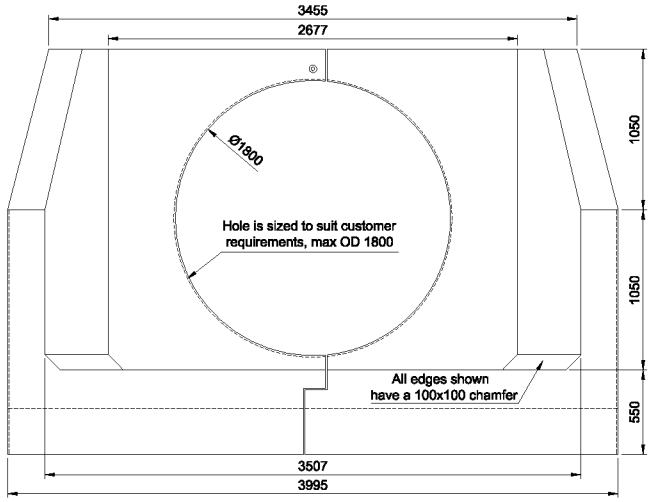

FRONT ELEVATION

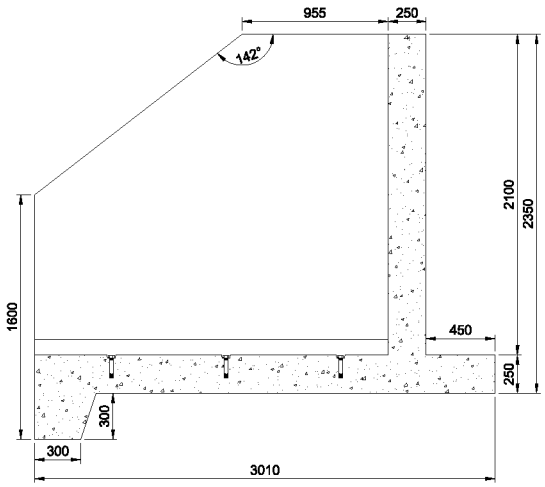

SECTION A-A

Headwall Range	Up to and including Pipe Sizes	Max Pipe O.D.	Back Wall Height (external)	Front Wall Height (external)	Backwall Width (internal)	Front Wall Width (internal)	Headwall Length	Standard invert level (variable)	Wall Thickness	Floor Thickness	Approx. weight kg
HW XXL-T2	1500	1800	2350	1600	2659	3507	3010	100	250	250	Part A 9205 Part B 9205

XXL-T3
headwall

Pipe size: up to 1050mm



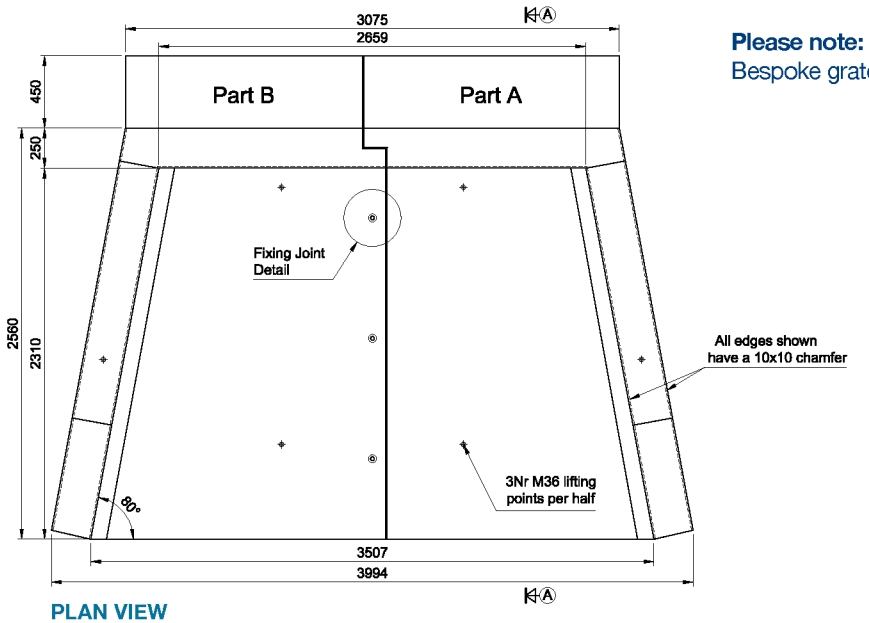

PLAN VIEW

Please note:
Bespoke grates and handrails are available upon request.

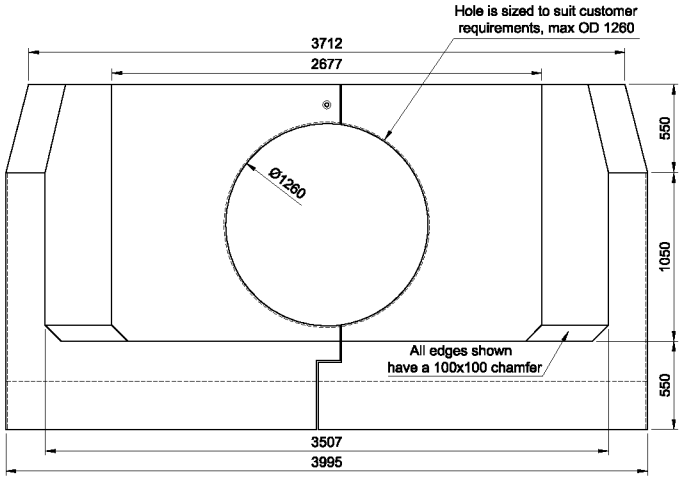

FRONT ELEVATION

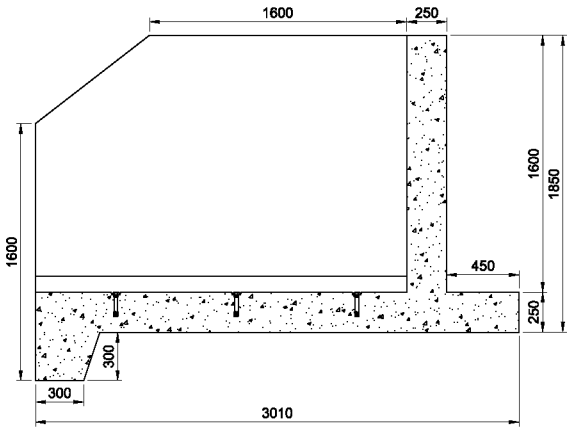

SECTION A-A

Headwall Range	Up to and including Pipe Sizes	Max Pipe O.D.	Back Wall Height (external)	Front Wall Height (external)	Backwall Width (internal)	Front Wall Width (internal)	Headwall Length	Standard invert level (variable)	Wall Thickness	Floor Thickness	Approx. weight kg
HW XXL-T3	1050	1260	1850	1600	2659	3507	3010	100	250	250	Part A 8421 Part B 8421

XXL-T4
headwall

Pipe size: up to 525mm



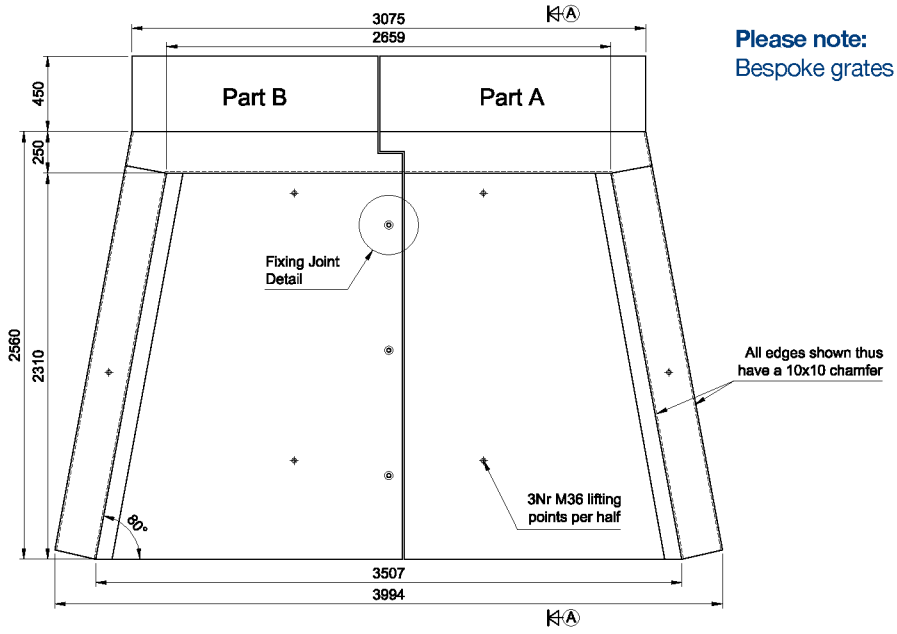

PLAN VIEW

Please note:
Bespoke grates and handrails are available upon request.

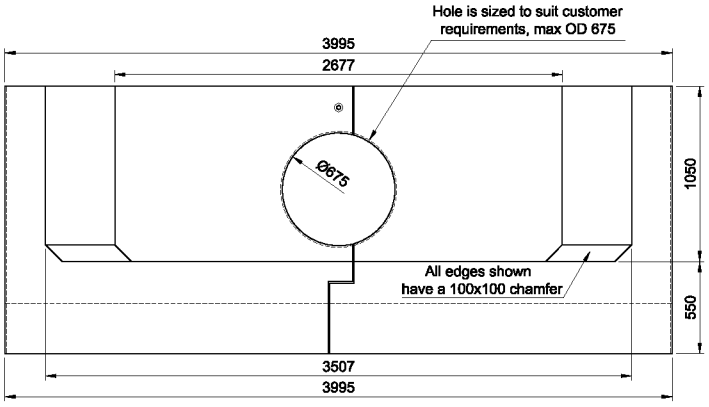

FRONT ELEVATION

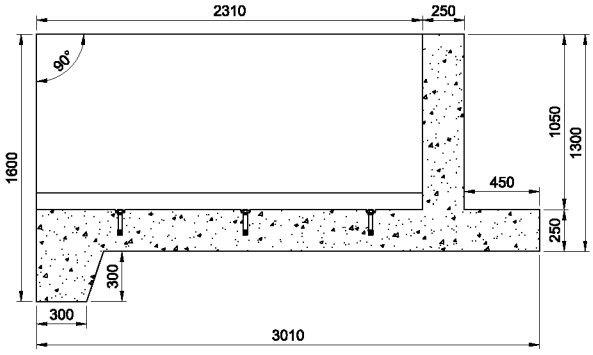

SECTION A-A

Headwall Range	Up to and including Pipe Sizes	Max Pipe O.D.	Back Wall Height (external)	Front Wall Height (external)	Backwall Width (internal)	Front Wall Width (internal)	Headwall Length	Standard invert level (variable)	Wall Thickness	Floor Thickness	Approx. weight kg
HW XXL-T4	525	675	1300	1600	2659	3507	3010	100	250	250	Part A 6915 Part B 6915

Bespoke example 1
headwall



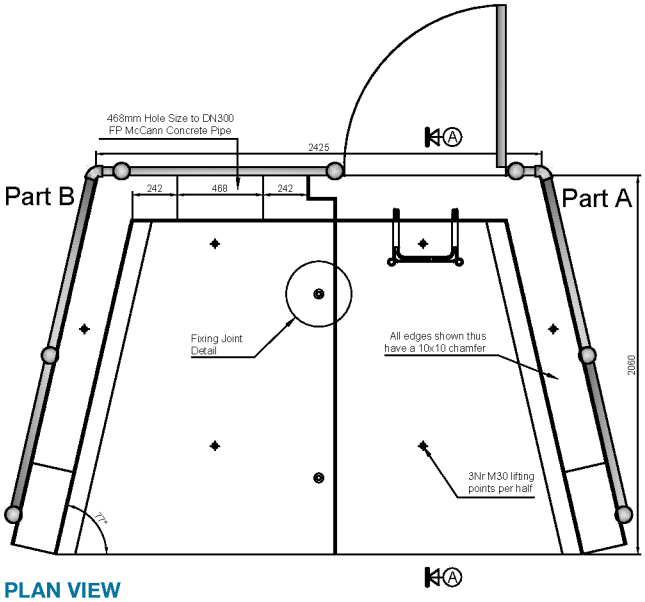

PLAN VIEW

Please note:
Bespoke grates and handrails are available upon request.

XL T4 Headwall
468mm hole to suit 300 pipe
Extended Toe
Ladder
Handrail with access

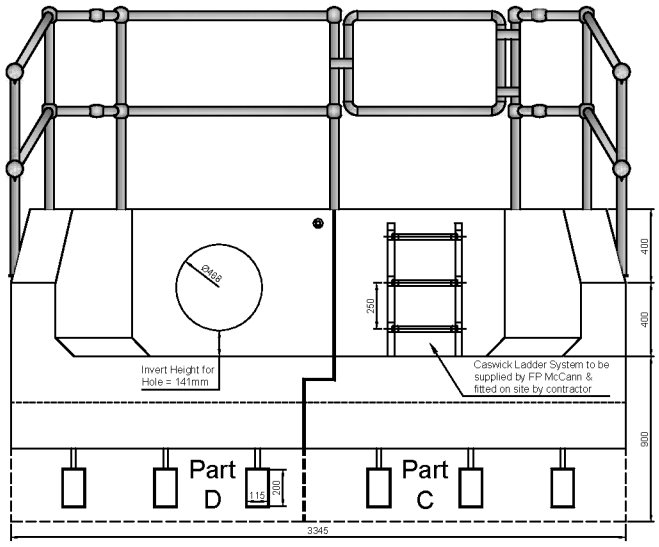

FRONT ELEVATION

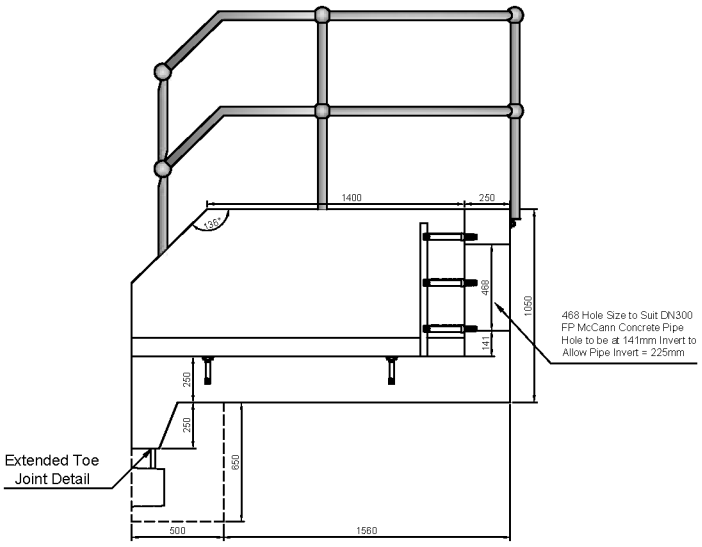

SECTION A-A

Bespoke example 2
headwall



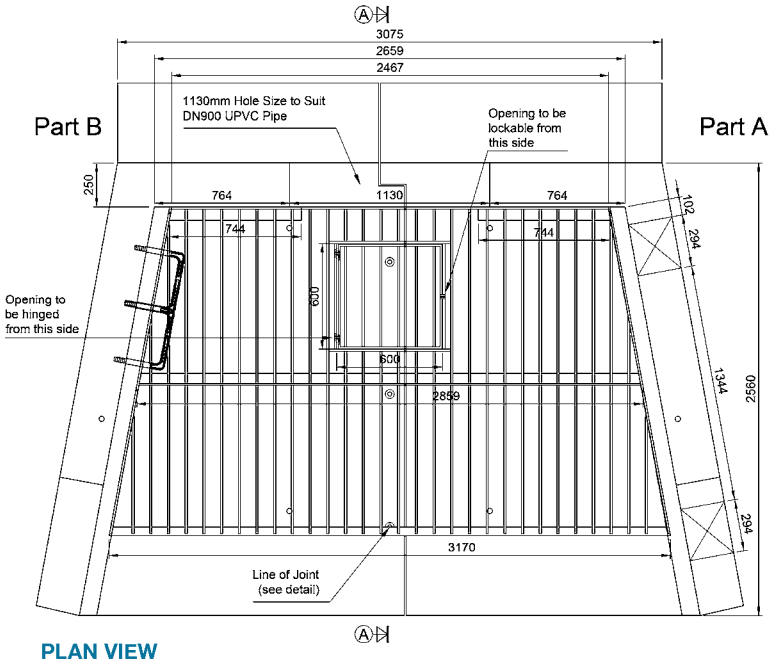

PLAN VIEW

XXL T3 Headwall
1130mm hole to suit 900 pipe
Special Grate with hinged access Ladders

Please note:
Bespoke grates and handrails are available upon request.

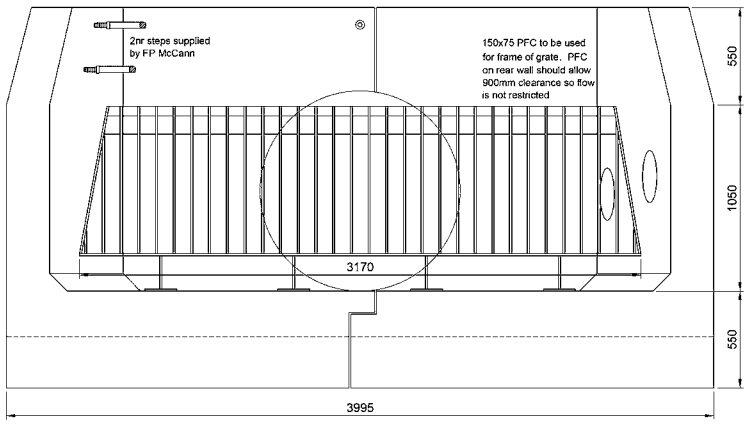

FRONT ELEVATION

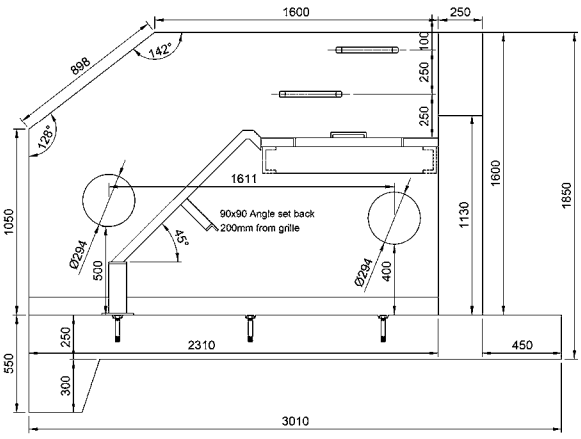

SECTION A-A

Bespoke example 3
headwall



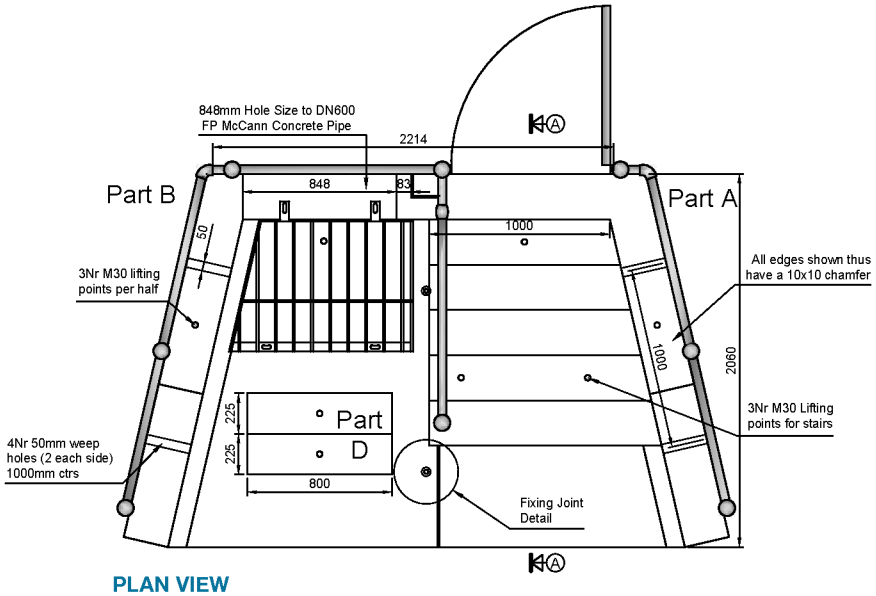

PLAN VIEW

XL T3 Headwall
848mm hole to suit 600 pipe
Stairs
Baffle Block
Handrail
Basket Grate

Please note:
Bespoke grates and handrails are available upon request.

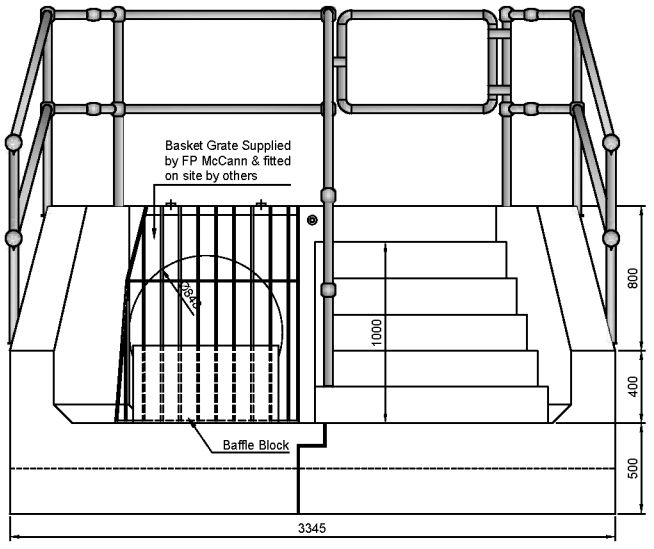

FRONT ELEVATION

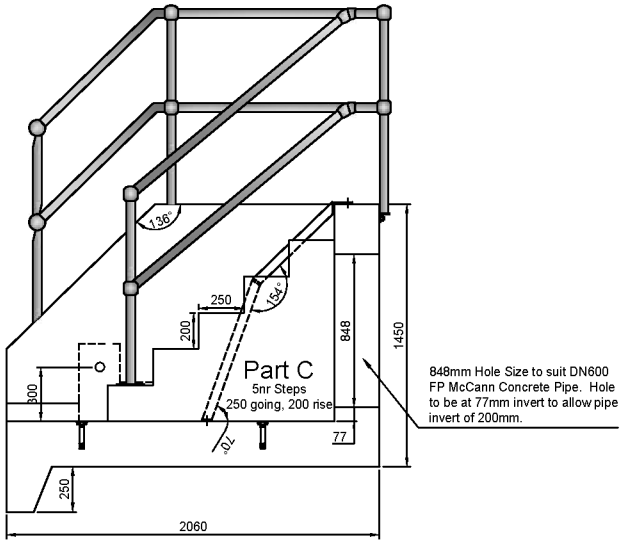

SECTION A-A

Accessories

Please note:
Bespoke grates and handrails are available upon request.



Typical Front Wall Grate



Typical Basket Grate



Typical Handrail

Installation Guide

1.0 Introduction
- This document describes the recommended procedure for the installation of FP McCann headwalls – the reinforced precast concrete headwall unit used in drainage outfalls.
- The precast concrete headwall is available in 11 standard sizes: small, medium, large, XL T1-4 and XXL T1-4; the latter two sizes are available with two piece extended toes, if required. Table 1 (overleaf) gives a summary of each size available. Gratings, handrails, baffle blocks, weir walls, stairs and ladders are also available for headwalls and are provided by FP McCann.

2.0 Disclaimer
- This document is produced by FP McCann as a 'recommended guideline document to the industry'.
- Its purpose is to aid contractors in the installation of the FP McCann precast concrete headwalls and headwalls with two piece extended toes. It is the responsibility of the contractor to ensure that the precast concrete headwall is carried out in accordance with the design specifications for the site.
- It is the responsibility of the contractor to install the precast concrete headwall safely in accordance with site conditions.

3.0 Receipt and Handling of Headwalls on Site
- Time and place of off-loading should be agreed before units arrive at site. For safety, all units are delivered in the upright position as installed. During delivery and off-loading, the units should be placed on 250mm skids to ensure no damage to the toe end. Units must be stored individually and not stacked.
- Off-loading should take place at the nearest hard standing area to the point of installation. An additional area for connecting the extended toe to the headwall is recommended.
- Off-loading must be carried out using appropriate lifting equipment. It is recommended that telescopic handlers, or equivalent, with forklift toes are used to off-load on-site; to prevent operatives from climbing onto the trailer. Each headwall section is supplied with 3 lifting anchors cast into the reinforcing in the floor and wall of the unit. Lifting loops are attached to these anchors and 3 legged adjustable chains (1 leg shortened) are used to transport on site, fix into position and for jointing both halves. Each extended toe section has 2 cast-in anchors with 2 equal chains used to transport and joint.
- Carefully inspect units during off-loading to verify that products are undamaged and comply with order placed. Two types of check are required:

Visual: Inspect the headwall and/or extended toe for any sign of damage, including cracked or chipped concrete, or damage that could affect the performance.

Design: Check that the item received is the one ordered. Headwalls are a standard FP McCann product and are labelled with the following information:

a. Headwall Size
b. Pipe Type
c. Pipe Diameter
d. Production date
e. Site / Customer Ref
f. Customer Order No. (if applicable)

- All FP McCann products are stamped with the production date (this is a quality control procedure).
- Any Headwalls/Silt Traps/Extended Toes rejected should be labelled and stored separately with the discrepancies for each noted on the delivery docket and reported for further action.

4.0 Installation of Small, Medium and Large Precast Concrete Headwalls and Silt-Traps
The headwall is manufactured as a monolithic precast unit. FP McCann operates a quality management system accredited to ISO 9001 with all constituent products subject to regular quality inspection. The headwalls are manufactured to exposure classes XD1 and XC3/4, depending on actual unit and use required.

- Cut and install the last section of pipe that the headwall will cover. Ensure that the pipe is fully fitted, leaving either the first (or last) section of pipe free from backfill to attach to the headwall.
- Excavate to formation level, place and compact a 300mm bed of 50mm clean drainage stone or similar free drainage aggregate.
- Check that the correct headwall has been brought to the installation point. Cross reference and check pipe connection diameter to that of the headwall. The movement of the headwall on-site must be undertaken in a manner that is safe and will not cause any damage to the unit in any way– the use of the cast-in lifting anchors fitted with loops and connected to equal length 3 legged chains is recommended.
- Place the headwall unit onto the bedded surface. It is essential that the headwall is positioned in the centre of the hole. Placing a shim at the bottom of the pipe to centre in position is recommended.
- Install the headwall onto the end of the pipeline.
- Using the appropriate grout or an epoxy resin, fill in the void between the reinforced concrete headwall and the pipe. This will ensure a firm fit. Backfill the pipe section between the headwall and embankment. It is recommended that 300mm surround of 50mm or similar free drainage aggregate is used to surround the headwall to ensure good groundwater drainage.

5.0 Installation of XL & XXL Precast Concrete Headwall
The headwall is manufactured as a 2 piece precast concrete unit to be joined on-site by others upon installation. FP McCann operates a Quality Management System accredited to ISO 9001 with all constituent products subject to regular quality inspection. The headwalls are manufactured to exposure classes XD1 and XC3/4, depending on actual unit and use required.

- Cut and install the last section of pipe that the headwall will cover. Ensure that the pipe is fully fitted, leaving a section of pipe free from backfill to accept the headwall.
- Excavate to formation level; this should be approx 750mm below the floor level of the headwall. Place and compact approx. 300mm bed of 50mm clean drainage stone or similar free drainage aggregate (compacted in 100mm layers), then place approx. 200mm of lean mix concrete, ensuring a level surface.
- Check that the correct headwall has been brought to the installation point. Cross reference and check pipe connection diameter to that of the headwall. The movement of the headwall on-site must be undertaken in a manner that is safe and will not cause any damage to the unit in any way – the use of the cast-in lifting anchors fitted with loops and connected to a standard set of 3 legged adjustable chains (1 leg shortened) is recommended.
- Place Part A of the headwall unit onto the bedded surface. It is essential that the headwall is positioned in the centre of the pipe and is levelled. Placing a shim at the bottom of the pipe to position is recommended.
- Clean the receiving jointing groove of Part A and place a 20mm bed of construction adhesive mortar (supplied with the units) onto the groove, ensuring a uniform bed.
- Clean the corresponding jointing surface of Part B and lift into position. Clean all excess mortar that is forced out when both halves are jointed. Using the appropriate grout or an epoxy resin, fill in the void between the reinforced concrete headwall and the pipe. This will ensure a firm fit. Backfill the pipe section between the head wall and embankment. It is recommended that 300mm bed of 50mm or similar clean drainage aggregate is used to surround the headwall to ensure good groundwater drainage.

6.0 Installation of Precast Concrete Headwalls with Extended Toes
The headwall is manufactured as a 2 piece precast concrete unit; the extended toe is a secondary unit to be connected to each half before installation. FP McCann operates a quality management system accredited to ISO 9001 with all constituent products subject to regular quality inspection. The headwalls are manufactured to exposure classes XD1 and XC3/4,depending on actual unit and use required.

- Cut and install the last section of pipe that the headwall will cover. Ensure that the pipe is fully fitted, leaving a section of pipe free from backfill to accept the headwall.

Installation Guide

- Excavate to formation level; this should be approx 750mm below the floor level of the headwall. Place and compact approx. 300mm bed of 50mm clean drainage stone or similar free drainage aggregate (compacted in 100mm layers), then place approx. 200mm of lean mix concrete ensuring a level surface.
- Check that the correct headwall has been brought to the installation point. Cross reference and check pipe connection diameter to that of the headwall. The movement of the headwall on-site must be undertaken in a manner that is safe and will not cause any damage to the unit in any way – the use of the cast in lifting anchors fitted with loops and connected to a standard set of 3 legged adjustable chains is recommended for the headwall pieces. Two legged chains required for extended toe. Lifting anchors are designed for a vertical lift only with a maximum lift angle of 60°.
- Place extended toe for headwall unit on a hard standing level surface (ensuring that it is the correct toe for the headwall unit). Lower the headwall unit onto the toe to allow it to rest lightly on it. Then secure the threaded pins through the joint locations in the toes, starting with the side nearest the headwall joint and finishing with the middle pin(s). Ensure pins are secured tightly and fit nuts provided to the threaded end on the toe. Use sikadur 31, or similar approved, as per joint detail between the headwall and the extended toe.
- Place this half of the headwall unit & extended toe onto the bedded surface. It is essential that the headwall is positioned in the centre of the pipe and is levelled. Placing a shim at the bottom of the pipe to position it is recommended.
- Repeat stage 4 & 5 for other headwall half and extended toe.
- Clean the receiving jointing groove of Part A and install the fixing bolts (supplied with the units), then place a 20mm bed of construction adhesive mortar (supplied with the units) onto the groove, ensuring a uniform bed.
- Clean the corresponding jointing surface of Part B and lift into position, taking care to lower the unit into position vertically, ensuring that the fixing bolts enter the fixing sockets fully.
- The retaining nuts should then be screwed onto both fixing bolts and tightened fully, connecting both pieces of the unit together. Clean away any excess mortar that is forced out when both halves are jointed.
- Using the appropriate grout or an epoxy resin, fill in the void between the reinforced concrete headwall and the pipe. This will ensure a firm fit. Backfill the pipe section between the headwall and embankment. It is recommended that 300mm bed of 50mm or similar clean drainage aggregate is used to surround the headwall to ensure good groundwater drainage.

7.0 Bespoke Solutions

- FP McCann understands that situations will arise when our standard headwall will not meet the specific design requirements of a particular contract and, if so, we will adapt our standard headwall to best suit your requirements.
- Where headwalls are installed in poor ground conditions there may be a need for an additional concrete toe to reduce the effect of sliding.

Headwall Range	Up to & including Pipe Sizes	Max Pipe O.D. mm	Approx. Weight (Kg)
HW Small 100	300	450	1100
HW Small 150	300	450	1390
HW Medium 100	450	630	1540
HW Medium 150	450	630	2020
HW Large 100	900	1130	3020
HW Large 200	900	1130	4740
HW XL-T1	1500	1800	Part A 4725 Part B 4725
HW XL-T2	1050	1260	Part A 4095 Part B 4095
HW XL-T3	675	885	Part A 3465 Part B 3465
HW XL-T4	375	505	Part A 2646 Part B 2646
HW XXL-T1	2100	2460	Part A 10,150 Part B 10,150
HW XXL-T2	1500	1800	Part A 9205 Part B 9205
HW XXL-T3	1050	1260	Part A 8421 Part B 8421
HW XXL-T4	525	675	Part A 6915 Part B 6915

Table 1
Headwall Range - Quick Reference Guide

Typical Small, Medium and Large Lifting Diagram (with standard toe)



Typical Small, Medium and Large Lifting Diagram (with extended toe)

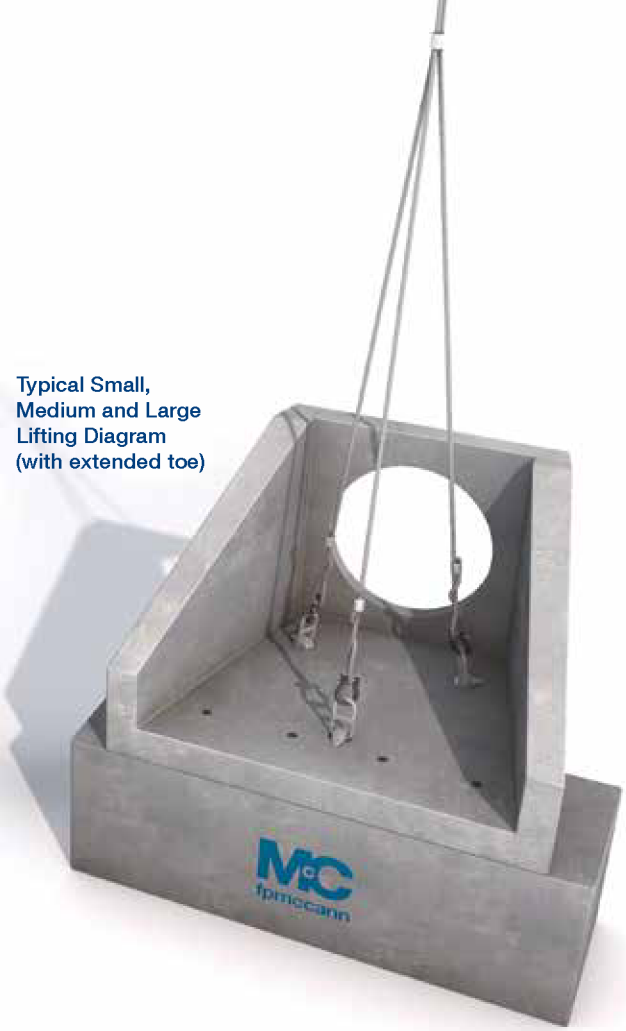

Typical XL & XXL Lifting Diagram (with standard toe)



Typical XL & XXL Lifting Diagram (with extended toe)



Lifting Diagrams

Extended Toes

Typical Small, Medium & Large Extended Toe

Precast headwall will be cast without a toe and with connection points to allow extended toe to be connected to headwall. The extended toe and headwall will arrive as separate components which must be joined and made good on site by others.

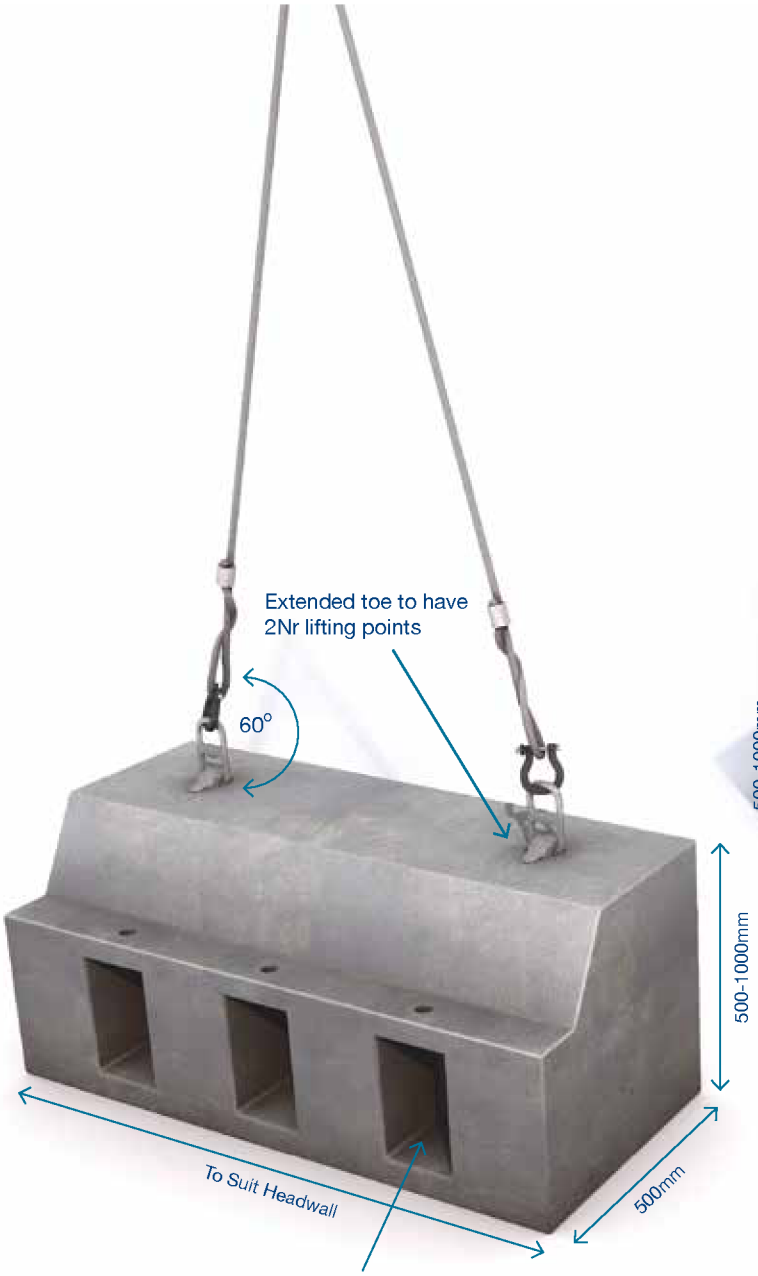

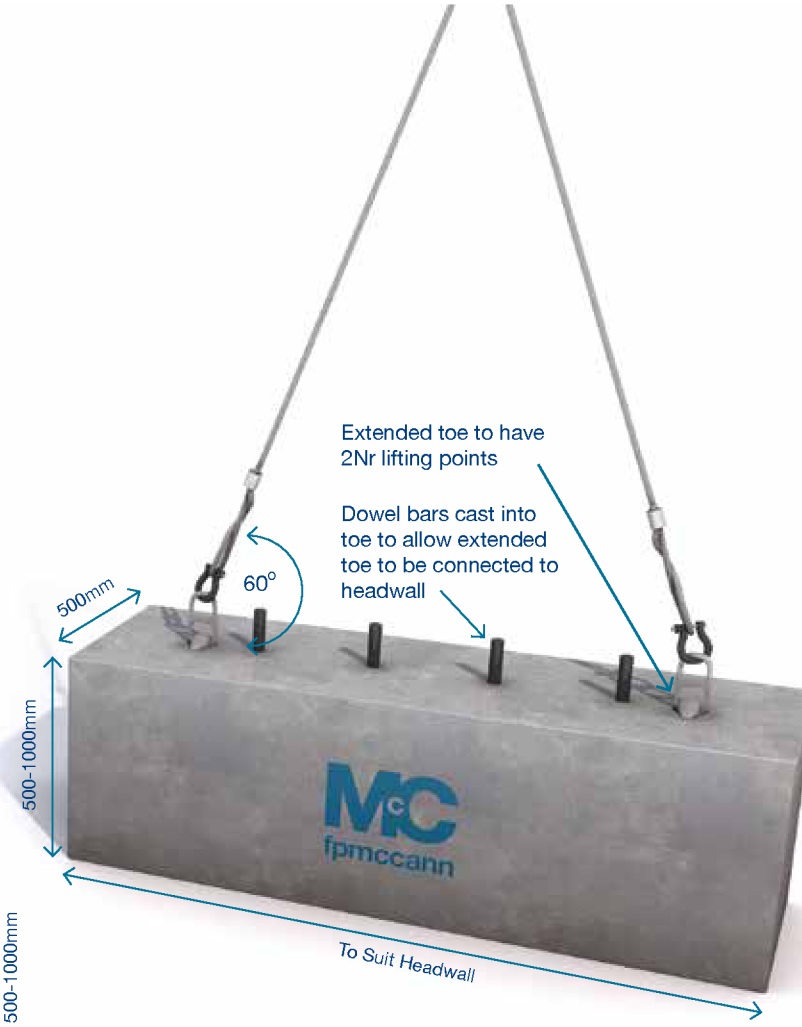

210x125mm holes to allow extended toe to be connected to headwall. Void filled on site by others

Typical XL & XXL Extended Toe

Extended toe will be cast to suit the existing toe on the precast headwall. 210x125mm holes at the front of the extended toe to allow it to be connected to the existing precast headwall. The precast headwall and extended toe will arrive to site as 4 separate components which must be joined and made good on site by others

Jointing Details

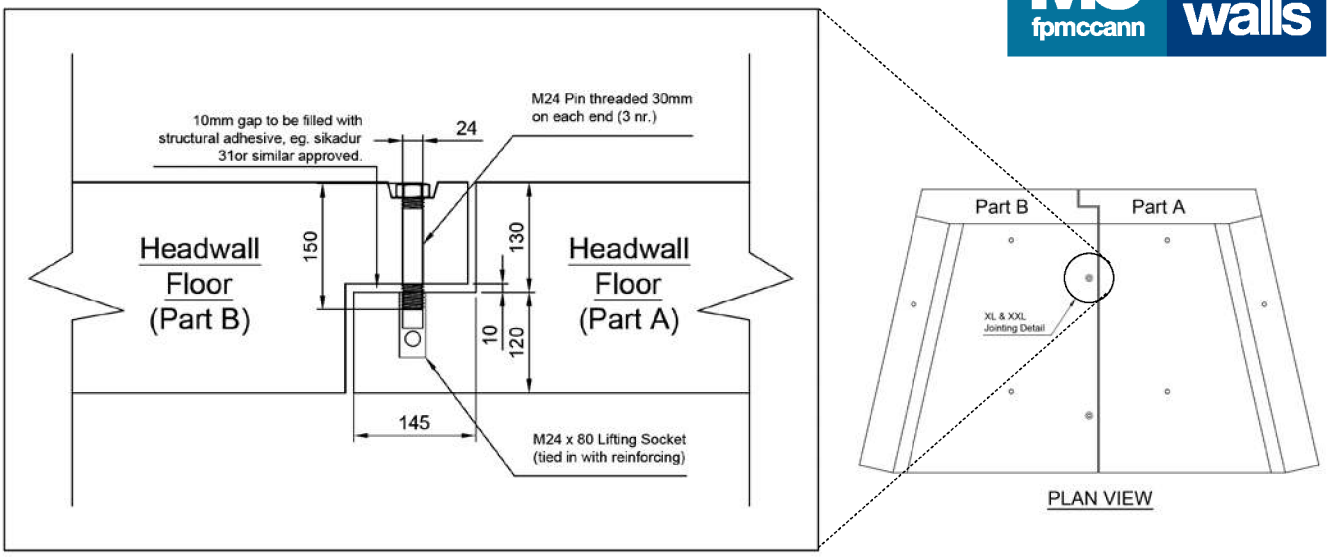

XL & XXL Jointing Detail

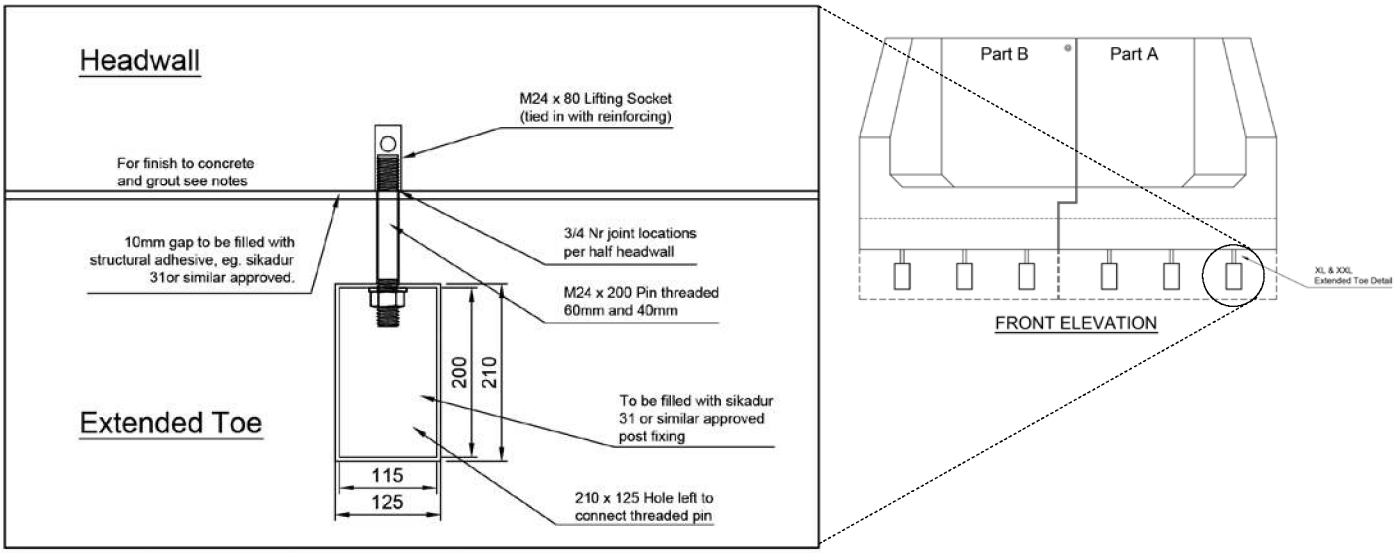

XL & XXL Extended Toe Detail

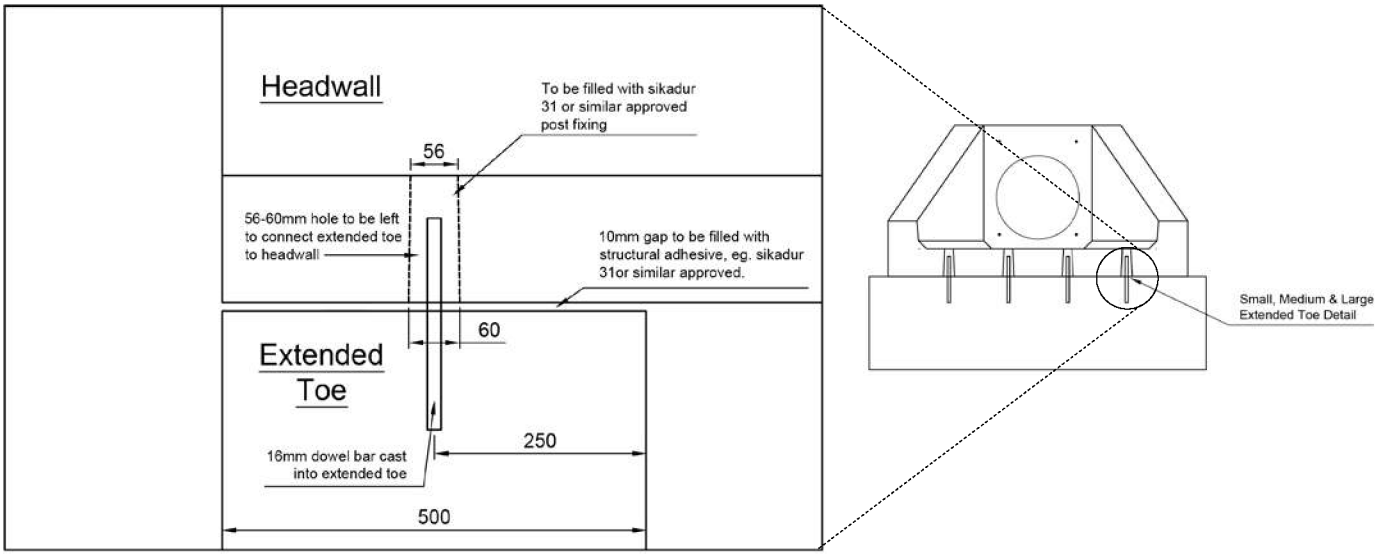

Small, Medium & Large Extended Toe Detail

Ellistown Office:
Whitehill Road
Ellistown
Leicestershire
LE67 1ET

T 01530 240000
F 01530 240013
precast@fpmccann.co.uk

Magherafelt Office:
16-18 Quarry Road
Knockloughrim
Magherafelt
BT45 8NR

T 028 7954 9026
F 028 7954 9993
precast@fpmccann.co.uk

Drainage and Water Management Solutions
Ellistown 01530 240000 Magherafelt 028 7954 9026

Tunnel and Shaft Solutions
Cadeby 01455 290780

Rail Solutions
Cadeby 01455 290780

Power and Infrastructure Solutions
Cadeby 01455 290780

Walling Solutions
Grantham 01476 562277 Lydney 01594 847500

Fencing Solutions
Cadeby 01455 290780

Agricultural Solutions
Lydney 01594 847500 Magherafelt 028 7954 9026

Modular Building Solutions
Grantham 01476 562277 Byley 01606 843500

Flooring Solutions
Weston Underwood 01335 361269

Specialist Precast Solutions
Littleport 01353 861416

fpmccann.co.uk

442800 442900 443000 443100 443200 443300

302400 302300 302200 302100 302000 301900

S-1
Junction
1.000
Open 1750x250mm
S0
Junction
1.001
Open 1750x250mm
S1
Junction
1.002
Open 1750x250mm
S2
Junction
1.003
Open 3500x500mm
S3
Junction
1.004
Open 3500x500mm
S4
Junction
1.005
Open 5250x750mm
S5
Junction
1.006
Open 5250x750mm
S6
Junction
Open 7000x1000mm
Junction
Open 7000x1000mm
Junction
S12
Junction
6.000
Open 7000x1000mm
S13
Junction
6.001
Open 7000x1000mm
S14
Junction
6.002
Open 7000x1000mm
S15
Junction
S18
1500mm
5.000
375mm
T0
1350mm
5.001
375mm
T1
1350mm
5.002
375mm
T10
1350mm
4.003
375mm
T9
1350mm
4.002
375mm
F8
1350mm
4.001
300mm
F7
1200mm
4.000
300mm
F6
1200mm
2.000
300mm
F0
1200mm
2.001
300mm
T1
1200mm
2.002
300mm
T2
1350mm
2.003
375mm
T3
1350mm
2.004
450mm
T4
1350mm
4.004
375mm
F11
Junction
2.005
450mm
F5
Junction
C0
Junction
8.000
450mm
C1
Junction
C2
Junction
12.000
375mm
C3
Junction
C4
Junction
9.000
375mm
C5
Junction
C6
Junction
11.000
375mm
C7
Junction
C8
Junction
7.000
450mm
C9
Junction
C10
Junction
10.000
150mm
C11
Junction
ES9
3.000
Open 1750x250mm
Junction
3.001
Open 1750x250mm
ES7
3.002
Open 1750x250mm
Junction
3.003
Open 1750x250mm
ES5
Junction
3.004
Open 1750x250mm
ES4
Junction
3.005
Open 3500x500mm
ES3
Junction
3.006
Open 3500x500mm
ES2
Junction
3.007
Open 5250x750mm
ES1
Junction
3.008
450mm
ES0
Junction

Storm v2.0 Copyright © 1988-2021 Causeway Technologies Ltd

Design Settings

Rainfall Methodology	FEH-22	Maximum Time of Concentration (mins)	30.00	Preferred Cover Depth (m)	1.200
Return Period (years)	100	Maximum Rainfall (mm/hr)	50.0	Include Intermediate Ground	✓
Additional Flow (%)	0	Minimum Velocity (m/s)	1.00	Enforce best practice design rules	x
CV	1.000	Connection Type	Level Inverts		
Time of Entry (mins)	5.00	Minimum Backdrop Height (m)	0.200		

Adoptable Manhole Type

Max Width (mm)	Diameter (mm)	Max Width (mm)	Diameter (mm)	Max Width (mm)	Diameter (mm)	Max Width (mm)	Diameter (mm)
374	1200	499	1350	749	1500	900	1800

>900 Link+900 mm

Max Depth (m)	Diameter (mm)	Max Depth (m)	Diameter (mm)
1.500	1050	99.999	1200

Swale Link Type

Shape	Open User Defined	Auto Increment (mm)	75	Follow Ground	✓	ks (mm) / n	0.030
Barrels	1	Steep Slope (1:X)	3	Velocity	Manning		

Available Diameters (mm)

7000

Width / Total	Depth / Total	Width / Total	Depth / Total	Width / Total	Depth / Total	Width / Total	Depth / Total
0.000	1.000	3.000	0.000	4.000	0.000	7.000	1.000

Circular Link Type

Shape	Circular	Auto Increment (mm)	75	Velocity	Manning
Barrels	1	Follow Ground	x	ks (mm) / n	0.010

Available Diameters (mm)

100 | 150

Flow+ v12.0 Copyright © 1988-2025 Causeway Technologies Ltd

Nodes

Name	Area (ha)	T of E (mins)	Cover Level (m)	Diameter (mm)	Easting (m)	Northing (m)	Depth (m)
S1	0.129	5.00	129.891		442880.000	302311.000	0.250
S0	0.087	5.00	129.900		442844.000	302339.000	0.250
S3	0.228	5.00	127.888		442970.000	302243.000	0.500
S2	0.164	5.00	129.148		442927.000	302275.000	0.500
S4			127.204		442989.000	302228.000	0.750
S5			126.705		443002.000	302215.000	0.750
S6			126.079		443019.000	302196.000	1.000
S7			125.935		443025.000	302191.000	1.000
S8	0.578	5.00	125.828		443031.000	302187.000	1.583
S12	0.637	5.00	125.500		443069.000	302164.000	1.295
S13	0.312	5.00	124.944		443084.000	302147.000	1.000
S14	0.211	5.00	123.993		443106.000	302126.000	1.000
S15	0.334	5.00	123.071		443122.498	302111.931	1.537
S18	0.699	5.00	123.071	1500	443160.000	302124.000	1.575
C0	0.148	5.00	118.000		443222.000	302101.000	1.600
C1			117.800		443238.000	302090.000	2.367
C2	0.220	5.00	117.000		443263.000	302069.000	1.600
C3			116.758		443274.000	302058.000	2.339
C4	0.097	5.00	116.000		443288.000	302045.000	1.600
C5			115.544		443300.000	302032.000	2.126
C6	0.185	5.00	115.000		443313.000	302021.000	1.600
C7			114.700		443325.000	302009.000	2.277
C8	0.333	5.00	114.700		443343.000	301994.000	2.300
C9			114.650		443364.000	301985.000	3.166
C10	1.717	5.00	114.650		443445.000	301962.000	3.250
C11			112.000		443449.000	301945.000	0.650
ES0			114.650		443463.000	302002.840	3.166
ES1	0.273	5.00	114.650		443479.000	302029.000	1.107
ES2	0.143	5.00	115.104		443488.000	302053.000	0.750
ES3	0.151	5.00	115.660		443494.000	302073.000	0.500

Flow+ v12.0 Copyright © 1988-2025 Causeway Technologies Ltd

Nodes

Name	Area (ha)	T of E (mins)	Cover Level (m)	Diameter (mm)	Easting (m)	Northing (m)	Depth (m)
ES4	0.080	5.00	116.252		443501.000	302094.637	0.500
ES5	0.056	5.00	116.873		443496.000	302107.000	0.250
ES6	0.019	5.00	118.143		443482.000	302126.000	0.250
ES7	0.119	5.00	118.398		443481.000	302130.000	0.250
ES8			118.923		443483.000	302150.000	0.250
ES9	0.056	5.00	119.122		443478.000	302154.000	0.250
F6	0.015	5.00	123.580	1200	443299.000	302220.000	1.500
F0	0.077	5.00	123.364	1200	443312.000	302209.000	1.517
F2	0.218	5.00	121.700	1350	443358.000	302165.000	1.725
F3	0.081	5.00	120.140	1350	443347.000	302139.000	1.740
F4	0.265	5.00	120.000	1350	443306.000	302099.000	2.900
F5			117.750		443260.000	302079.000	2.317
F7	0.069	5.00	123.092	1200	443283.000	302204.000	1.422
F1	0.199	5.00	122.812	1200	443333.000	302190.000	1.353
F8	0.149	5.00	121.913	1350	443264.000	302185.000	1.413
F9	0.189	5.00	120.489	1350	443240.000	302160.000	1.489
F10	0.090	5.00	120.000	1350	443215.000	302135.000	2.000
F11			118.717		443212.000	302117.000	2.277
I0	0.089	5.00	123.488	1350	443179.000	302141.000	2.341
I1	0.019	5.00	123.837	1350	443196.000	302155.941	3.192
S-1		5.00	130.000		442803.167	302369.403	0.250

Flow+ v12.0 Copyright © 1988-2025 Causeway Technologies Ltd

Links

Name	US Node	DS Node	Length (m)	ks (mm) / n	US IL (m)	DS IL (m)	Fall (m)	Slope (1:X)	Dia (mm)	T of C (mins)	Rain (mm/hr)
1.001	S0	S1	45.607	0.030	129.650	129.641	0.009	5067.4	250	13.29	50.0
1.002	S1	S2	59.203	0.030	129.641	128.898	0.743	79.7	250	14.29	50.0
1.003	S2	S3	53.600	0.030	128.648	127.388	1.260	42.5	500	14.70	50.0
1.004	S3	S4	24.207	0.030	127.388	126.704	0.684	35.4	500	14.87	50.0
1.005	S4	S5	18.385	0.030	126.454	125.955	0.499	36.8	750	14.97	50.0
1.006	S5	S6	25.495	0.030	125.955	125.329	0.626	40.7	750	15.12	50.0
1.007	S6	S7	7.810	0.030	125.079	124.935	0.144	54.2	1000	15.16	50.0
1.008	S7	S8	7.211	0.030	124.935	124.828	0.107	67.4	1000	15.21	50.0
6.000	S12	S13	22.672	0.030	124.205	123.944	0.261	86.9	1000	5.16	50.0
6.001	S13	S14	30.414	0.030	123.944	122.993	0.951	32.0	1000	5.29	50.0
6.002	S14	S15	21.682	0.030	122.993	121.972	1.021	21.2	1000	5.36	50.0
5.001	I0	I1	22.633	0.010	121.147	120.645	0.502	45.1	375	5.30	50.0

Name	Vel (m/s)	Cap (l/s)	Flow (l/s)	US Depth (m)	DS Depth (m)	Σ Area (ha)	Σ Add Inflow (l/s)	Pro Depth (mm)	Pro Velocity (m/s)
1.001	0.124	31.0	15.7	0.000	0.000	0.087	0.0	186	0.104
1.002	0.990	247.5	39.0	0.000	0.000	0.216	0.0	109	0.615
1.003	2.151	2151.0	68.6	0.000	0.000	0.380	0.0	99	0.869
1.004	2.358	2358.3	109.9	0.000	0.000	0.608	0.0	121	1.060
1.005	3.029	6814.6	109.9	0.000	0.000	0.608	0.0	104	1.005
1.006	2.881	6481.6	109.9	0.000	0.000	0.608	0.0	106	0.967
1.007	3.024	12096.0	109.9	0.000	0.000	0.608	0.0	100	0.838
1.008	2.713	10851.3	109.9	0.000	0.000	0.608	0.0	107	0.780
6.000	2.390	9558.1	115.1	0.295	0.000	0.637	0.0	118	0.725
6.001	3.938	15752.4	171.5	0.000	0.000	0.949	0.0	111	1.156
6.002	4.833	19330.9	209.6	0.000	0.099	1.160	0.0	111	1.418
5.001	3.073	339.5	142.4	1.966	2.817	0.788	0.0	170	2.940

Flow+ v12.0 Copyright © 1988-2025 Causeway Technologies Ltd

Links

Name	US Node	DS Node	Length (m)	ks (mm) / n	US IL (m)	DS IL (m)	Fall (m)	Slope (1:X)	Dia (mm)	T of C (mins)	Rain (mm/hr)
5.000	S18	I0	25.495	0.010	121.496	121.147	0.349	73.1	375	5.18	50.0
4.000	F6	F7	22.627	0.010	122.080	121.670	0.410	55.2	300	5.16	50.0
4.001	F7	F8	26.870	0.010	121.670	120.500	1.170	23.0	300	5.28	50.0
4.002	F8	F9	34.655	0.010	120.500	119.000	1.500	23.1	375	5.41	50.0
4.003	F9	F10	35.355	0.010	119.000	118.000	1.000	35.4	375	5.58	50.0
4.004	F10	F11	18.248	0.010	118.000	116.900	1.100	16.6	375	5.64	50.0
2.000	F6	F0	17.029	0.010	122.080	121.847	0.233	73.1	300	5.14	50.0
2.001	F0	F1	28.320	0.010	121.847	121.459	0.388	73.0	300	5.36	50.0
2.002	F1	F2	35.355	0.010	121.459	119.975	1.484	23.8	300	5.52	50.0
2.003	F2	F3	28.231	0.010	119.975	118.400	1.575	17.9	375	5.62	50.0
2.004	F3	F4	57.280	0.010	118.400	117.100	1.300	44.1	450	5.89	50.0
2.005	F4	F5	50.160	0.010	117.100	115.600	1.500	33.4	450	6.10	50.0
8.000	C0	C1	19.416	0.010	116.400	115.600	0.800	24.3	450	5.07	50.0

Name	Vel (m/s)	Cap (l/s)	Flow (l/s)	US Depth (m)	DS Depth (m)	Σ Area (ha)	Σ Add Inflow (l/s)	Pro Depth (mm)	Pro Velocity (m/s)
5.000	2.415	266.7	126.4	1.200	1.966	0.699	0.0	182	2.384
4.000	2.394	169.2	2.7	1.200	1.122	0.015	0.0	27	0.891
4.001	3.711	262.3	15.1	1.122	1.113	0.084	0.0	49	2.019
4.002	4.293	474.2	42.1	1.038	1.114	0.233	0.0	76	2.658
4.003	3.471	383.3	76.3	1.114	1.625	0.422	0.0	113	2.702
4.004	5.067	559.6	238.5	1.625	1.442	1.320	0.0	171	4.865
2.000	2.080	147.0	0.0	1.200	1.217	0.000	0.0	0	0.000
2.001	2.082	147.1	13.8	1.217	1.053	0.077	0.0	62	1.310
2.002	3.644	257.6	49.8	1.053	1.425	0.276	0.0	89	2.817
2.003	4.874	538.4	89.2	1.350	1.365	0.493	0.0	103	3.601
2.004	3.511	558.4	103.8	1.290	2.450	0.574	0.0	131	2.685
2.005	4.030	640.9	151.6	2.450	1.700	0.839	0.0	149	3.299
8.000	4.730	752.3	26.7	1.150	1.750	0.148	0.0	58	2.215

Flow+ v12.0 Copyright © 1988-2025 Causeway Technologies Ltd

Links

Name	US Node	DS Node	Length (m)	ks (mm) / n	US IL (m)	DS IL (m)	Fall (m)	Slope (1:X)	Dia (mm)	T of C (mins)	Rain (mm/hr)
12.000	C2	C3	15.556	0.010	115.400	114.600	0.800	19.4	375	5.06	50.0
9.000	C4	C5	17.692	0.010	114.400	113.600	0.800	22.1	375	5.07	50.0
11.000	C6	C7	16.971	0.010	113.400	112.600	0.800	21.2	375	5.06	50.0
7.000	C8	C9	22.847	0.010	112.400	111.600	0.800	28.6	450	5.09	50.0
3.000	ES9	ES8	6.403	0.030	118.872	118.673	0.199	32.2	250	5.07	50.0
3.001	ES8	ES7	20.100	0.030	118.673	118.148	0.525	38.3	250	5.30	50.0
3.002	ES7	ES6	4.123	0.030	118.148	117.893	0.255	16.2	250	5.33	50.0
3.003	ES6	ES5	23.601	0.030	117.893	116.623	1.270	18.6	250	5.53	50.0
3.004	ES5	ES4	13.336	0.030	116.623	116.002	0.621	21.5	250	5.64	50.0
3.005	ES4	ES3	22.741	0.030	115.752	115.160	0.592	38.4	500	5.81	50.0
3.006	ES3	ES2	20.881	0.030	115.160	114.604	0.556	37.6	500	5.96	50.0
3.007	ES2	ES1	25.632	0.030	114.354	113.543	0.811	31.6	750	6.09	50.0
3.008	ES1	ES0	30.665	0.010	113.543	112.000	1.543	19.9	450	6.19	50.0
10.000	C10	C11	17.464	0.010	111.400	111.350	0.050	349.3	150	5.49	50.0

Name	Vel (m/s)	Cap (l/s)	Flow (l/s)	US Depth (m)	DS Depth (m)	Σ Area (ha)	Σ Add Inflow (l/s)	Pro Depth (mm)	Pro Velocity (m/s)
12.000	4.680	516.9	39.8	1.225	1.783	0.220	0.0	71	2.778
9.000	4.388	484.7	17.5	1.225	1.569	0.097	0.0	49	2.075
11.000	4.481	494.9	33.4	1.225	1.725	0.185	0.0	66	2.559
7.000	4.361	693.5	60.2	1.850	2.600	0.333	0.0	89	2.668
3.000	1.558	389.5	10.2	0.000	0.000	0.056	0.0	44	0.593
3.001	1.428	357.1	10.2	0.000	0.000	0.056	0.0	46	0.557
3.002	2.198	549.5	31.7	0.000	0.000	0.176	0.0	67	1.046
3.003	2.050	512.5	35.1	0.000	0.000	0.194	0.0	73	1.021
3.004	1.907	476.8	45.2	0.000	0.000	0.250	0.0	85	1.037
3.005	2.264	2263.6	59.7	0.000	0.000	0.330	0.0	89	0.864
3.006	2.289	2289.3	87.0	0.000	0.000	0.482	0.0	109	0.974
3.007	3.270	7357.7	112.8	0.000	0.357	0.624	0.0	101	1.068
3.008	5.228	831.4	162.1	0.657	2.200	0.897	0.0	135	4.056
10.000	0.599	10.6	310.2	3.100	0.500	1.717	0.0	150	0.611

Flow+ v12.0 Copyright © 1988-2025 Causeway Technologies Ltd

Links

Name	US Node	DS Node	Length (m)	ks (mm) / n	US IL (m)	DS IL (m)	Fall (m)	Slope (1:X)	Dia (mm)	T of C (mins)	Rain (mm/hr)
1.000	S-1	S0	50.909	0.030	129.750	129.650	0.100	509.1	250	7.17	50.0
5.002	I1	F10	28.276	0.010	120.720	118.000	2.720	10.4	375	5.37	50.0

Name	Vel (m/s)	Cap (l/s)	Flow (l/s)	US Depth (m)	DS Depth (m)	Σ Area (ha)	Σ Add Inflow (l/s)	Pro Depth (mm)	Pro Velocity (m/s)
1.000	0.392	97.9	0.0	0.000	0.000	0.000	0.0	0	0.000
5.002	6.401	706.9	145.8	2.742	1.625	0.807	0.0	115	5.036

Pipeline Schedule

Link	Length (m)	Slope (1:X)	Dia (mm)	Link Type	US CL (m)	US IL (m)	US Depth (m)	DS CL (m)	DS IL (m)	DS Depth (m)
1.001	45.607	5067.4	250	Swale	129.900	129.650	0.000	129.891	129.641	0.000
1.002	59.203	79.7	250	Swale	129.891	129.641	0.000	129.148	128.898	0.000
1.003	53.600	42.5	500	Swale	129.148	128.648	0.000	127.888	127.388	0.000
1.004	24.207	35.4	500	Swale	127.888	127.388	0.000	127.204	126.704	0.000
1.005	18.385	36.8	750	Swale	127.204	126.454	0.000	126.705	125.955	0.000
1.006	25.495	40.7	750	Swale	126.705	125.955	0.000	126.079	125.329	0.000
1.007	7.810	54.2	1000	Swale	126.079	125.079	0.000	125.935	124.935	0.000
1.008	7.211	67.4	1000	Swale	125.935	124.935	0.000	125.828	124.828	0.000

Link	US Node	Dia (mm)	Node Type	MH Type	DS Node	Dia (mm)	Node Type	MH Type
1.001	S0		Junction		S1		Junction	
1.002	S1		Junction		S2		Junction	
1.003	S2		Junction		S3		Junction	
1.004	S3		Junction		S4		Junction	
1.005	S4		Junction		S5		Junction	
1.006	S5		Junction		S6		Junction	
1.007	S6		Junction		S7		Junction	
1.008	S7		Junction		S8		Junction	

Flow+ v12.0 Copyright © 1988-2025 Causeway Technologies Ltd

Pipeline Schedule

Link	Length (m)	Slope (1:X)	Dia (mm)	Link Type	US CL (m)	US IL (m)	US Depth (m)	DS CL (m)	DS IL (m)	DS Depth (m)
6.000	22.672	86.9	1000	Swale	125.500	124.205	0.295	124.944	123.944	0.000
6.001	30.414	32.0	1000	Swale	124.944	123.944	0.000	123.993	122.993	0.000
6.002	21.682	21.2	1000	Swale	123.993	122.993	0.000	123.071	121.972	0.099
5.001	22.633	45.1	375	Circular	123.488	121.147	1.966	123.837	120.645	2.817
5.000	25.495	73.1	375	Circular	123.071	121.496	1.200	123.488	121.147	1.966
4.000	22.627	55.2	300	Circular	123.580	122.080	1.200	123.092	121.670	1.122
4.001	26.870	23.0	300	Circular	123.092	121.670	1.122	121.913	120.500	1.113
4.002	34.655	23.1	375	Circular	121.913	120.500	1.038	120.489	119.000	1.114
4.003	35.355	35.4	375	Circular	120.489	119.000	1.114	120.000	118.000	1.625
4.004	18.248	16.6	375	Circular	120.000	118.000	1.625	118.717	116.900	1.442
2.000	17.029	73.1	300	Circular	123.580	122.080	1.200	123.364	121.847	1.217
2.001	28.320	73.0	300	Circular	123.364	121.847	1.217	122.812	121.459	1.053

Link	US Node	Dia (mm)	Node Type	MH Type	DS Node	Dia (mm)	Node Type	MH Type
6.000	S12		Junction		S13		Junction	
6.001	S13		Junction		S14		Junction	
6.002	S14		Junction		S15		Junction	
5.001	I0	1350	Manhole	Adoptable	I1	1350	Manhole	Adoptable
5.000	S18	1500	Manhole	Adoptable	I0	1350	Manhole	Adoptable
4.000	F6	1200	Manhole	Adoptable	F7	1200	Manhole	Adoptable
4.001	F7	1200	Manhole	Adoptable	F8	1350	Manhole	Adoptable
4.002	F8	1350	Manhole	Adoptable	F9	1350	Manhole	Adoptable
4.003	F9	1350	Manhole	Adoptable	F10	1350	Manhole	Adoptable
4.004	F10	1350	Manhole	Adoptable	F11		Junction	
2.000	F6	1200	Manhole	Adoptable	F0	1200	Manhole	Adoptable
2.001	F0	1200	Manhole	Adoptable	F1	1200	Manhole	Adoptable

Flow+ v12.0 Copyright © 1988-2025 Causeway Technologies Ltd

Pipeline Schedule

Link	Length (m)	Slope (1:X)	Dia (mm)	Link Type	US CL (m)	US IL (m)	US Depth (m)	DS CL (m)	DS IL (m)	DS Depth (m)
2.002	35.355	23.8	300	Circular	122.812	121.459	1.053	121.700	119.975	1.425
2.003	28.231	17.9	375	Circular	121.700	119.975	1.350	120.140	118.400	1.365
2.004	57.280	44.1	450	Circular	120.140	118.400	1.290	120.000	117.100	2.450
2.005	50.160	33.4	450	Circular	120.000	117.100	2.450	117.750	115.600	1.700
8.000	19.416	24.3	450	Circular	118.000	116.400	1.150	117.800	115.600	1.750
12.000	15.556	19.4	375	Circular	117.000	115.400	1.225	116.758	114.600	1.783
9.000	17.692	22.1	375	Circular	116.000	114.400	1.225	115.544	113.600	1.569
11.000	16.971	21.2	375	Circular	115.000	113.400	1.225	114.700	112.600	1.725
7.000	22.847	28.6	450	Circular	114.700	112.400	1.850	114.650	111.600	2.600
3.000	6.403	32.2	250	Swale	119.122	118.872	0.000	118.923	118.673	0.000
3.001	20.100	38.3	250	Swale	118.923	118.673	0.000	118.398	118.148	0.000
3.002	4.123	16.2	250	Swale	118.398	118.148	0.000	118.143	117.893	0.000
3.003	23.601	18.6	250	Swale	118.143	117.893	0.000	116.873	116.623	0.000
3.004	13.336	21.5	250	Swale	116.873	116.623	0.000	116.252	116.002	0.000
3.005	22.741	38.4	500	Swale	116.252	115.752	0.000	115.660	115.160	0.000

Link	US Node	Dia (mm)	Node Type	MH Type	DS Node	Dia (mm)	Node Type	MH Type
2.002	F1	1200	Manhole	Adoptable	F2	1350	Manhole	Adoptable
2.003	F2	1350	Manhole	Adoptable	F3	1350	Manhole	Adoptable
2.004	F3	1350	Manhole	Adoptable	F4	1350	Manhole	Adoptable
2.005	F4	1350	Manhole	Adoptable	F5		Junction	
8.000	C0		Junction		C1		Junction	
12.000	C2		Junction		C3		Junction	
9.000	C4		Junction		C5		Junction	
11.000	C6		Junction		C7		Junction	
7.000	C8		Junction		C9		Junction	
3.000	ES9		Junction		ES8		Junction	
3.001	ES8		Junction		ES7		Junction	
3.002	ES7		Junction		ES6		Junction	
3.003	ES6		Junction		ES5		Junction	
3.004	ES5		Junction		ES4		Junction	
3.005	ES4		Junction		ES3		Junction	

Flow+ v12.0 Copyright © 1988-2025 Causeway Technologies Ltd

Pipeline Schedule

Link	Length (m)	Slope (1:X)	Dia (mm)	Link Type	US CL (m)	US IL (m)	US Depth (m)	DS CL (m)	DS IL (m)	DS Depth (m)
3.006	20.881	37.6	500	Swale	115.660	115.160	0.000	115.104	114.604	0.000
3.007	25.632	31.6	750	Swale	115.104	114.354	0.000	114.650	113.543	0.357
3.008	30.665	19.9	450	Circular	114.650	113.543	0.657	114.650	112.000	2.200
10.000	17.464	349.3	150	Circular	114.650	111.400	3.100	112.000	111.350	0.500
1.000	50.909	509.1	250	Swale	130.000	129.750	0.000	129.900	129.650	0.000
5.002	28.276	10.4	375	Circular	123.837	120.720	2.742	120.000	118.000	1.625

Link	US Node	Dia (mm)	Node Type	MH Type	DS Node	Dia (mm)	Node Type	MH Type
3.006	ES3		Junction		ES2		Junction	
3.007	ES2		Junction		ES1		Junction	
3.008	ES1		Junction		ES0		Junction	
10.000	C10		Junction		C11		Junction	
1.000	S-1		Junction		S0		Junction	
5.002	I1	1350	Manhole	Adoptable	F10	1350	Manhole	Adoptable

Manhole Schedule

Node	Easting (m)	Northing (m)	CL (m)	Depth (m)	Dia (mm)	Connections	Link	IL (m)	Dia (mm)
S1	442880.000	302311.000	129.891	0.250		1	1.001	129.641	250
						0	1.002	129.641	250
S0	442844.000	302339.000	129.900	0.250		1	1.000	129.650	250
						0	1.001	129.650	250
S3	442970.000	302243.000	127.888	0.500		1	1.003	127.388	500
						0	1.004	127.388	500

Flow+ v12.0 Copyright © 1988-2025 Causeway Technologies Ltd

Manhole Schedule

Node	Easting (m)	Northing (m)	CL (m)	Depth (m)	Dia (mm)	Connections	Link	IL (m)	Dia (mm)
S2	442927.000	302275.000	129.148	0.500		1	1.002	128.898	250
						0	1.003	128.648	500
S4	442989.000	302228.000	127.204	0.750		1	1.004	126.704	500
						0	1.005	126.454	750
S5	443002.000	302215.000	126.705	0.750		1	1.005	125.955	750
						0	1.006	125.955	750
S6	443019.000	302196.000	126.079	1.000		1	1.006	125.329	750
						0	1.007	125.079	1000
S7	443025.000	302191.000	125.935	1.000		1	1.007	124.935	1000
						0	1.008	124.935	1000
S8	443031.000	302187.000	125.828	1.583		1	1.008	124.828	1000
S12	443069.000	302164.000	125.500	1.295		0	6.000	124.205	1000
S13	443084.000	302147.000	124.944	1.000		1	6.000	123.944	1000
						0	6.001	123.944	1000

Flow+ v12.0 Copyright © 1988-2025 Causeway Technologies Ltd

Manhole Schedule

Node	Easting (m)	Northing (m)	CL (m)	Depth (m)	Dia (mm)	Connections	Link	IL (m)	Dia (mm)
S14	443106.000	302126.000	123.993	1.000		1	6.001	122.993	1000
						0	6.002	122.993	1000
S15	443122.498	302111.931	123.071	1.537		1	6.002	121.972	1000
S18	443160.000	302124.000	123.071	1.575	1500	0	5.000	121.496	375
C0	443222.000	302101.000	118.000	1.600		0	8.000	116.400	450
C1	443238.000	302090.000	117.800	2.367		1	8.000	115.600	450
C2	443263.000	302069.000	117.000	1.600		0	12.000	115.400	375
C3	443274.000	302058.000	116.758	2.339		1	12.000	114.600	375
C4	443288.000	302045.000	116.000	1.600		0	9.000	114.400	375

Flow+ v12.0 Copyright © 1988-2025 Causeway Technologies Ltd

Manhole Schedule

Node	Easting (m)	Northing (m)	CL (m)	Depth (m)	Dia (mm)	Connections	Link	IL (m)	Dia (mm)
C5	443300.000	302032.000	115.544	2.126		1	9.000	113.600	375
C6	443313.000	302021.000	115.000	1.600		0	11.000	113.400	375
C7	443325.000	302009.000	114.700	2.277		1	11.000	112.600	375
C8	443343.000	301994.000	114.700	2.300		0	7.000	112.400	450
C9	443364.000	301985.000	114.650	3.166		1	7.000	111.600	450
C10	443445.000	301962.000	114.650	3.250		0	10.000	111.400	150
C11	443449.000	301945.000	112.000	0.650		1	10.000	111.350	150
ES0	443463.000	302002.840	114.650	3.166		1	3.008	112.000	450

Flow+ v12.0 Copyright © 1988-2025 Causeway Technologies Ltd

Manhole Schedule

Node	Easting (m)	Northing (m)	CL (m)	Depth (m)	Dia (mm)	Connections	Link	IL (m)	Dia (mm)
ES1	443479.000	302029.000	114.650	1.107		1	3.007	113.543	750
						0	3.008	113.543	450
ES2	443488.000	302053.000	115.104	0.750		1	3.006	114.604	500
						0	3.007	114.354	750
ES3	443494.000	302073.000	115.660	0.500		1	3.005	115.160	500
						0	3.006	115.160	500
ES4	443501.000	302094.637	116.252	0.500		1	3.004	116.002	250
						0	3.005	115.752	500
ES5	443496.000	302107.000	116.873	0.250		1	3.003	116.623	250
						0	3.004	116.623	250
ES6	443482.000	302126.000	118.143	0.250		1	3.002	117.893	250
						0	3.003	117.893	250
ES7	443481.000	302130.000	118.398	0.250		1	3.001	118.148	250
						0	3.002	118.148	250
ES8	443483.000	302150.000	118.923	0.250		1	3.000	118.673	250
						0	3.001	118.673	250

Flow+ v12.0 Copyright © 1988-2025 Causeway Technologies Ltd

Manhole Schedule

Node	Easting (m)	Northing (m)	CL (m)	Depth (m)	Dia (mm)	Connections	Link	IL (m)	Dia (mm)
ES9	443478.000	302154.000	119.122	0.250		 0	3.000	118.872	250
F6	443299.000	302220.000	123.580	1.500	1200	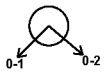 0-1 0-2	4.000 2.000	122.080 122.080	300 300
F0	443312.000	302209.000	123.364	1.517	1200	 1 0	2.000 2.001	121.847 121.847	300 300
F2	443358.000	302165.000	121.700	1.725	1350	 1 0	2.002 2.003	119.975 119.975	300 375
F3	443347.000	302139.000	120.140	1.740	1350	 1 0	2.003 2.004	118.400 118.400	375 450
F4	443306.000	302099.000	120.000	2.900	1350	 1 0	2.004 2.005	117.100 117.100	450 450
F5	443260.000	302079.000	117.750	2.317		 1	2.005	115.600	450
F7	443283.000	302204.000	123.092	1.422	1200	 1 0	4.000 4.001	121.670 121.670	300 300

Flow+ v12.0 Copyright © 1988-2025 Causeway Technologies Ltd

Manhole Schedule

Node	Easting (m)	Northing (m)	CL (m)	Depth (m)	Dia (mm)	Connections	Link	IL (m)	Dia (mm)
F1	443333.000	302190.000	122.812	1.353	1200	1	2.001	121.459	300
						0	2.002	121.459	300
F8	443264.000	302185.000	121.913	1.413	1350	1	4.001	120.500	300
						0	4.002	120.500	375
F9	443240.000	302160.000	120.489	1.489	1350	1	4.002	119.000	375
						0	4.003	119.000	375
F10	443215.000	302135.000	120.000	2.000	1350	1	5.002	118.000	375
						2	4.003	118.000	375
						0	4.004	118.000	375
F11	443212.000	302117.000	118.717	2.277		1	4.004	116.900	375
I0	443179.000	302141.000	123.488	2.341	1350	1	5.000	121.147	375
						0	5.001	121.147	375
I1	443196.000	302155.941	123.837	3.192	1350	1	5.001	120.645	375
						0	5.002	120.720	375
S-1	442803.167	302369.403	130.000	0.250		0	1.000	129.750	250

Flow+ v12.0 Copyright © 1988-2025 Causeway Technologies Ltd

Simulation Settings

Rainfall Methodology	FEH-22	Analysis Speed	Normal	Starting Level (m)		100 year (l/s)	52.4
Rainfall Events	Singular	Skip Steady State	x	Check Discharge Rate(s)	✓	Check Discharge Volume	x
Summer CV	1.000	Drain Down Time (mins)	240	2 year (l/s)	19.0		
Winter CV	1.000	Additional Storage (m³/ha)	20.0	30 year (l/s)	41.2		

Storm Durations

15	60	180	360	600	960	2160	4320	7200	10080
30	120	240	480	720	1440	2880	5760	8640	

Return Period (years)	Climate Change (CC %)	Additional Area (A %)	Additional Flow (Q %)	Return Period (years)	Climate Change (CC %)	Additional Area (A %)	Additional Flow (Q %)
2	0	0	0	100	0	0	0
30	0	0	0	100	40	0	0

Pre-development Discharge Rate

Site Makeup	Greenfield	BFIHost	0.562	Growth Factor 100 year	2.48	Q 30 year (l/s)	41.2
Greenfield Method	FEH	Region	1	Betterment (%)	0	Q 100 year (l/s)	52.4
Positively Drained Area (ha)	9.970	QBar/QMed conversion factor	1.111	QMed	19.0		
SAAR (mm)	645	Growth Factor 2 year	0.90	QBar	21.1		
Host	1	Growth Factor 30 year	1.95	Q 2 year (l/s)	19.0		

Node S2 Online Weir Control

Flap Valve	x	Invert Level (m)	128.648	Design Flow (l/s)	25.0	Discharge Coefficient	0.590
Replaces Downstream Link	✓	Design Depth (m)	0.100	Width (m)	0.428		

Node S3 Online Weir Control

Flap Valve	x	Invert Level (m)	127.388	Design Flow (l/s)	40.0	Discharge Coefficient	0.590
Replaces Downstream Link	✓	Design Depth (m)	0.100	Width (m)	0.685		

Flow+ v12.0 Copyright © 1988-2025 Causeway Technologies Ltd

Node S8 Online Weir Control

Flap Valve	x	Invert Level (m)	124.245	Design Flow (l/s)	25.0	Discharge Coefficient	0.590
Replaces Downstream Link	x	Design Depth (m)	0.100	Width (m)	0.428		

Node F5 Online Weir Control

Flap Valve	✓	Invert Level (m)	115.433	Design Flow (l/s)	1675.0	Discharge Coefficient	0.590
Replaces Downstream Link	x	Design Depth (m)	1.600	Width (m)	0.448		

Node C9 Online Orifice Control

Flap Valve	✓	Invert Level (m)	111.484	Design Flow (l/s)	575.0	Discharge Coefficient	0.600
Replaces Downstream Link	x	Design Depth (m)	2.000	Diameter (m)	0.454		

Node C1 Online Orifice Control

Flap Valve	✓	Invert Level (m)	115.433	Design Flow (l/s)	385.0	Discharge Coefficient	0.600
Replaces Downstream Link	x	Design Depth (m)	1.600	Diameter (m)	0.394		

Node ES0 Online Orifice Control

Flap Valve	✓	Invert Level (m)	111.484	Design Flow (l/s)	600.0	Discharge Coefficient	0.600
Replaces Downstream Link	x	Design Depth (m)	2.500	Diameter (m)	0.436		

Node C10 Online Orifice Control

Flap Valve	x	Invert Level (m)	111.400	Design Flow (l/s)	21.1	Discharge Coefficient	0.600
Replaces Downstream Link	✓	Design Depth (m)	2.900	Diameter (m)	0.077		

Node C0 Flow through Pond Storage Structure

Base Inf Coefficient (m/hr)	0.00000	Porosity	1.00	Main Channel Length (m)	40.000
Side Inf Coefficient (m/hr)	0.00000	Invert Level (m)	116.400	Main Channel Slope (1:X)	999.0
Safety Factor	2.0	Time to half empty (mins)	42	Main Channel n	0.030

Flow+ v12.0 Copyright © 1988-2025 Causeway Technologies Ltd

Inlets

F11

Depth (m)	Area (m²)	Inf Area (m²)	Depth (m)	Area (m²)	Inf Area (m²)
0.000	183.0	0.0	1.600	670.0	0.0

Node C2 Flow through Pond Storage Structure

Base Inf Coefficient (m/hr)	0.00000	Porosity	1.00	Main Channel Length (m)	32.650
Side Inf Coefficient (m/hr)	0.00000	Invert Level (m)	115.400	Main Channel Slope (1:X)	999.0
Safety Factor	2.0	Time to half empty (mins)	20	Main Channel n	0.030

Inlets

C1 | F5

Depth (m)	Area (m²)	Inf Area (m²)	Depth (m)	Area (m²)	Inf Area (m²)
0.000	220.0	0.0	1.600	786.0	0.0

Node C4 Flow through Pond Storage Structure

Base Inf Coefficient (m/hr)	0.00000	Porosity	1.00	Main Channel Length (m)	19.000
Side Inf Coefficient (m/hr)	0.00000	Invert Level (m)	114.400	Main Channel Slope (1:X)	999.0
Safety Factor	2.0	Time to half empty (mins)	16	Main Channel n	0.030

Inlets

C3

Depth (m)	Area (m²)	Inf Area (m²)	Depth (m)	Area (m²)	Inf Area (m²)
0.000	113.0	0.0	1.600	445.0	0.0

Flow+ v12.0 Copyright © 1988-2025 Causeway Technologies Ltd

Node C6 Flow through Pond Storage Structure

Base Inf Coefficient (m/hr)	0.00000	Porosity	1.00	Main Channel Length (m)	17.700
Side Inf Coefficient (m/hr)	0.00000	Invert Level (m)	113.400	Main Channel Slope (1:X)	999.0
Safety Factor	2.0	Time to half empty (mins)	36	Main Channel n	0.030

Inlets

C5

Depth (m)	Area (m²)	Inf Area (m²)	Depth (m)	Area (m²)	Inf Area (m²)
0.000	65.0	0.0	1.600	401.0	0.0

Node C8 Flow through Pond Storage Structure

Base Inf Coefficient (m/hr)	0.00000	Porosity	1.00	Main Channel Length (m)	23.400
Side Inf Coefficient (m/hr)	0.00000	Invert Level (m)	112.400	Main Channel Slope (1:X)	999.0
Safety Factor	2.0	Time to half empty (mins)		Main Channel n	0.030

Inlets

C7

Depth (m)	Area (m²)	Inf Area (m²)	Depth (m)	Area (m²)	Inf Area (m²)
0.000	163.0	0.0	1.600	691.0	0.0

Node C10 Flow through Pond Storage Structure

Base Inf Coefficient (m/hr)	0.00000	Porosity	1.00	Main Channel Length (m)	84.200
Side Inf Coefficient (m/hr)	0.00000	Invert Level (m)	111.400	Main Channel Slope (1:X)	999.0
Safety Factor	2.0	Time to half empty (mins)		Main Channel n	0.030

Inlets

C9 | ES0

Flow+ v12.0 Copyright © 1988-2025 Causeway Technologies Ltd

Depth (m)	Area (m²)	Inf Area (m²)	Depth (m)	Area (m²)	Inf Area (m²)
0.000	1128.8	0.0	3.250	4255.0	0.0

Node S12 Flow through Pond Storage Structure

Base Inf Coefficient (m/hr)	0.00000	Porosity	1.00	Main Channel Length (m)	40.000
Side Inf Coefficient (m/hr)	0.00000	Invert Level (m)	124.205	Main Channel Slope (1:X)	999.0
Safety Factor	2.0	Time to half empty (mins)	16	Main Channel n	0.030

Inlets

S8

Depth (m)	Area (m²)	Inf Area (m²)	Depth (m)	Area (m²)	Inf Area (m²)
0.000	133.9	0.0	1.000	597.4	0.0

Node S18 Flow through Pond Storage Structure

Base Inf Coefficient (m/hr)	0.00000	Porosity	1.00	Main Channel Length (m)	38.000
Side Inf Coefficient (m/hr)	0.00000	Invert Level (m)	121.496	Main Channel Slope (1:X)	999.0
Safety Factor	2.0	Time to half empty (mins)	27	Main Channel n	0.030

Inlets

S15

Depth (m)	Area (m²)	Inf Area (m²)	Depth (m)	Area (m²)	Inf Area (m²)
0.000	183.0	0.0	1.415	685.0	0.0

Flow+ v12.0 Copyright © 1988-2025 Causeway Technologies Ltd

Rainfall

Event	Peak Intensity (mm/hr)	Average Intensity (mm/hr)	Event	Peak Intensity (mm/hr)	Average Intensity (mm/hr)
2 year 15 minute summer	112.641	31.873	2 year 7200 minute summer	1.792	0.457
2 year 15 minute winter	79.046	31.873	2 year 7200 minute winter	1.156	0.457
2 year 30 minute summer	72.577	20.537	2 year 8640 minute summer	1.615	0.412
2 year 30 minute winter	50.931	20.537	2 year 8640 minute winter	1.042	0.412
2 year 60 minute summer	47.937	12.668	2 year 10080 minute summer	1.489	0.380
2 year 60 minute winter	31.848	12.668	2 year 10080 minute winter	0.961	0.380
2 year 120 minute summer	34.335	9.074	30 year 15 minute summer	277.261	78.455
2 year 120 minute winter	22.811	9.074	30 year 15 minute winter	194.569	78.455
2 year 180 minute summer	27.760	7.143	30 year 30 minute summer	180.218	50.995
2 year 180 minute winter	18.044	7.143	30 year 30 minute winter	126.469	50.995
2 year 240 minute summer	22.427	5.927	30 year 60 minute summer	119.759	31.649
2 year 240 minute winter	14.900	5.927	30 year 60 minute winter	79.565	31.649
2 year 360 minute summer	17.297	4.451	30 year 120 minute summer	75.344	19.911
2 year 360 minute winter	11.244	4.451	30 year 120 minute winter	50.057	19.911
2 year 480 minute summer	13.539	3.578	30 year 180 minute summer	57.884	14.896
2 year 480 minute winter	8.995	3.578	30 year 180 minute winter	37.626	14.896
2 year 600 minute summer	10.983	3.004	30 year 240 minute summer	45.451	12.011
2 year 600 minute winter	7.504	3.004	30 year 240 minute winter	30.196	12.011
2 year 720 minute summer	9.691	2.597	30 year 360 minute summer	33.971	8.742
2 year 720 minute winter	6.513	2.597	30 year 360 minute winter	22.082	8.742
2 year 960 minute summer	7.814	2.058	30 year 480 minute summer	26.175	6.917
2 year 960 minute winter	5.176	2.058	30 year 480 minute winter	17.390	6.917
2 year 1440 minute summer	5.505	1.475	30 year 600 minute summer	21.019	5.749
2 year 1440 minute winter	3.699	1.475	30 year 600 minute winter	14.361	5.749
2 year 2160 minute summer	3.854	1.065	30 year 720 minute summer	18.410	4.934
2 year 2160 minute winter	2.656	1.065	30 year 720 minute winter	12.373	4.934
2 year 2880 minute summer	3.181	0.853	30 year 960 minute summer	14.687	3.868
2 year 2880 minute winter	2.138	0.853	30 year 960 minute winter	9.729	3.868
2 year 4320 minute summer	2.431	0.636	30 year 1440 minute summer	10.226	2.741
2 year 4320 minute winter	1.601	0.636	30 year 1440 minute winter	6.872	2.741
2 year 5760 minute summer	2.048	0.524	30 year 2160 minute summer	7.089	1.959
2 year 5760 minute winter	1.325	0.524	30 year 2160 minute winter	4.885	1.959

Flow+ v12.0 Copyright © 1988-2025 Causeway Technologies Ltd

Rainfall

Event	Peak Intensity (mm/hr)	Average Intensity (mm/hr)
30 year 2880 minute summer	5.812	1.558
30 year 2880 minute winter	3.906	1.558
30 year 4320 minute summer	4.394	1.149
30 year 4320 minute winter	2.894	1.149
30 year 5760 minute summer	3.674	0.940
30 year 5760 minute winter	2.378	0.940
30 year 7200 minute summer	3.195	0.815
30 year 7200 minute winter	2.062	0.815
30 year 8640 minute summer	2.867	0.731
30 year 8640 minute winter	1.851	0.731
30 year 10080 minute summer	2.634	0.672
30 year 10080 minute winter	1.700	0.672
100 year 15 minute summer	347.397	98.301
100 year 15 minute winter	243.787	98.301
100 year 30 minute summer	228.458	64.646
100 year 30 minute winter	160.321	64.646
100 year 60 minute summer	152.960	40.423
100 year 60 minute winter	101.623	40.423
100 year 120 minute summer	94.617	25.004
100 year 120 minute winter	62.861	25.004
100 year 180 minute summer	72.217	18.584
100 year 180 minute winter	46.943	18.584
100 year 240 minute summer	56.529	14.939
100 year 240 minute winter	37.556	14.939
100 year 360 minute summer	42.160	10.849
100 year 360 minute winter	27.405	10.849
100 year 480 minute summer	32.431	8.571
100 year 480 minute winter	21.547	8.571
100 year 600 minute summer	26.006	7.113
100 year 600 minute winter	17.769	7.113
100 year 720 minute summer	22.750	6.097
100 year 720 minute winter	15.289	6.097
100 year 960 minute summer	18.111	4.769
100 year 960 minute winter	11.997	4.769
100 year 1440 minute summer	12.532	3.359
100 year 1440 minute winter	8.422	3.359
100 year 2160 minute summer	8.614	2.381
100 year 2160 minute winter	5.935	2.381
100 year 2880 minute summer	7.013	1.879
100 year 2880 minute winter	4.713	1.879
100 year 4320 minute summer	5.246	1.372
100 year 4320 minute winter	3.455	1.372
100 year 5760 minute summer	4.352	1.114
100 year 5760 minute winter	2.817	1.114
100 year 7200 minute summer	3.764	0.960
100 year 7200 minute winter	2.429	0.960
100 year 8640 minute summer	3.363	0.858
100 year 8640 minute winter	2.171	0.858
100 year 10080 minute summer	3.080	0.786
100 year 10080 minute winter	1.988	0.786
100 year +40% CC 15 minute summer	486.355	137.622
100 year +40% CC 15 minute winter	341.302	137.622
100 year +40% CC 30 minute summer	319.841	90.504
100 year +40% CC 30 minute winter	224.450	90.504
100 year +40% CC 60 minute summer	214.144	56.592
100 year +40% CC 60 minute winter	142.272	56.592
100 year +40% CC 120 minute summer	132.464	35.006
100 year +40% CC 120 minute winter	88.006	35.006
100 year +40% CC 180 minute summer	101.103	26.017
100 year +40% CC 180 minute winter	65.720	26.017
100 year +40% CC 240 minute summer	79.140	20.914
100 year +40% CC 240 minute winter	52.579	20.914
100 year +40% CC 360 minute summer	59.024	15.189
100 year +40% CC 360 minute winter	38.367	15.189

Flow+ v12.0 Copyright © 1988-2025 Causeway Technologies Ltd

Rainfall

Event	Peak Intensity (mm/hr)	Average Intensity (mm/hr)	Event	Peak Intensity (mm/hr)	Average Intensity (mm/hr)
100 year +40% CC 480 minute summer	45.404	11.999	100 year +40% CC 2880 minute summer	9.818	2.631
100 year +40% CC 480 minute winter	30.165	11.999	100 year +40% CC 2880 minute winter	6.598	2.631
100 year +40% CC 600 minute summer	36.409	9.959	100 year +40% CC 4320 minute summer	7.345	1.920
100 year +40% CC 600 minute winter	24.877	9.959	100 year +40% CC 4320 minute winter	4.837	1.920
100 year +40% CC 720 minute summer	31.849	8.536	100 year +40% CC 5760 minute summer	6.093	1.560
100 year +40% CC 720 minute winter	21.405	8.536	100 year +40% CC 5760 minute winter	3.944	1.560
100 year +40% CC 960 minute summer	25.356	6.677	100 year +40% CC 7200 minute summer	5.270	1.344
100 year +40% CC 960 minute winter	16.796	6.677	100 year +40% CC 7200 minute winter	3.401	1.344
100 year +40% CC 1440 minute summer	17.544	4.702	100 year +40% CC 8640 minute summer	4.709	1.201
100 year +40% CC 1440 minute winter	11.791	4.702	100 year +40% CC 8640 minute winter	3.039	1.201
100 year +40% CC 2160 minute summer	12.060	3.333	100 year +40% CC 10080 minute summer	4.312	1.100
100 year +40% CC 2160 minute winter	8.310	3.333	100 year +40% CC 10080 minute winter	2.783	1.100

Flow+ v12.0 Copyright © 1988-2025 Causeway Technologies Ltd

Results for 2 year Critical Storm Duration. Lowest mass balance: 99.74%

Node Event	US Node	Peak (mins)	Level (m)	Depth (m)	Inflow (l/s)	Node Vol (m³)	Flood (m³)	Status
30 minute summer	S1	20	129.733	0.092	27.9	0.9485	0.0000	OK
30 minute summer	S0	20	129.767	0.117	14.1	0.8167	0.0000	OK
15 minute summer	S3	11	127.558	0.170	88.7	1.5504	0.0000	OK
15 minute summer	S2	11	128.804	0.156	49.2	1.0216	0.0000	OK
15 minute summer	S4	11	126.588	0.134	88.5	0.0000	0.0000	OK
15 minute summer	S5	11	126.091	0.136	88.3	0.0000	0.0000	OK
15 minute summer	S6	12	125.224	0.145	86.5	0.0000	0.0000	OK
15 minute summer	S7	12	125.087	0.152	86.5	0.0000	0.0000	OK
15 minute summer	S8	11	124.668	0.423	186.6	3.0908	0.0000	OK
15 minute summer	S12	13	124.458	0.253	255.6	2.4878	0.0000	OK
15 minute summer	S13	12	124.161	0.217	276.2	1.3540	0.0000	OK
15 minute summer	S14	12	123.198	0.205	305.1	0.8640	0.0000	OK
30 minute summer	S15	23	121.924	0.390	336.3	1.6942	0.0000	OK

Link Event (Upstream Depth)	US Node	Link	DS Node	Outflow (l/s)	Velocity (m/s)	Flow/Cap	Link Vol (m³)	Discharge Vol (m³)
30 minute summer	S1	1.002	S2	23.7	0.579	0.096	2.4412	
30 minute summer	S0	1.001	S1	8.6	0.146	0.276	2.7187	
15 minute summer	S3	Weir	S4	88.5				
15 minute summer	S2	Weir	S3	48.6				
15 minute summer	S4	1.005	S5	88.3	1.002	0.013	1.6223	
15 minute summer	S5	1.006	S6	86.5	0.971	0.013	2.2743	
15 minute summer	S6	1.007	S7	86.5	0.841	0.007	0.8068	
15 minute summer	S7	1.008	S8	87.2	0.865	0.008	0.7280	
15 minute summer	S8	Flow through pond	S12	161.0	0.144	0.012	44.7851	
15 minute summer	S12	6.000	S13	232.4	1.062	0.024	5.0491	
15 minute summer	S13	6.001	S14	274.7	1.476	0.017	5.6643	
15 minute summer	S14	6.002	S15	300.6	1.700	0.016	3.8350	
30 minute summer	S15	Flow through pond	S18	255.1	0.121	0.020	104.6101	

Flow+ v12.0 Copyright © 1988-2025 Causeway Technologies Ltd

Results for 2 year Critical Storm Duration. Lowest mass balance: 99.74%

Node Event	US Node	Peak (mins)	Level (m)	Depth (m)	Inflow (l/s)	Node Vol (m³)	Flood (m³)	Status
30 minute summer	S18	23	121.924	0.428	342.2	4.5525	0.0000	SURCHARGED
30 minute summer	C0	24	116.643	0.243	315.3	0.4479	0.0000	OK
30 minute summer	C1	24	116.418	0.985	284.2	0.0000	0.0000	OK
30 minute summer	C2	22	115.639	0.239	388.7	0.6581	0.0000	OK
30 minute summer	C3	23	114.655	0.236	378.4	0.0000	0.0000	OK
30 minute summer	C4	23	114.649	0.249	378.5	0.3018	0.0000	OK
30 minute summer	C5	24	113.660	0.243	376.8	0.0000	0.0000	OK
30 minute summer	C6	24	113.648	0.248	383.0	0.5727	0.0000	OK
120 minute summer	C7	82	112.772	0.349	364.6	0.0000	0.0000	OK
120 minute summer	C8	82	112.771	0.371	358.9	1.0735	0.0000	OK
960 minute winter	C9	915	112.686	1.202	83.4	0.0000	0.0000	OK
960 minute winter	C10	945	112.686	1.286	67.7	13.5916	0.0000	SURCHARGED
15 minute summer	C11	1	111.350	0.000	8.4	0.0000	0.0000	OK
960 minute winter	ES0	945	112.686	1.201	13.0	0.0000	0.0000	OK
15 minute summer	ES1	11	113.676	0.133	157.2	0.6566	0.0000	OK

Link Event (Upstream Depth)	US Node	Link	DS Node	Outflow (l/s)	Velocity (m/s)	Flow/Cap	Link Vol (m³)	Discharge Vol (m³)
30 minute summer	S18	5.000	I0	249.2	2.456	0.935	2.5939	
30 minute summer	C0	8.000	C1	284.2	2.832	0.378	2.3853	
30 minute summer	C1	Flow through pond	C2	365.4	0.212	0.009	59.2329	
30 minute summer	C2	12.000	C3	378.4	5.110	0.732	1.1519	
30 minute summer	C3	Flow through pond	C4	372.3	0.215	0.010	33.6679	
30 minute summer	C4	9.000	C5	376.8	4.847	0.777	1.3754	
30 minute summer	C5	Flow through pond	C6	374.1	0.297	0.013	22.3692	
30 minute summer	C6	11.000	C7	382.4	4.945	0.773	1.3125	
120 minute summer	C7	Flow through pond	C8	341.4	0.165	0.007	80.1462	
120 minute summer	C8	7.000	C9	336.2	2.593	0.485	3.4063	
960 minute winter	C9	Flow through pond	C10	43.6	0.027	0.000	2150.2646	
960 minute winter	C10	Orifice	C11	13.8				713.3
960 minute winter	ES0	Flow through pond	C10	43.6	0.027	0.000	2150.2646	
15 minute summer	ES1	3.008	ES0	156.9	4.013	0.189	1.1996	

Flow+ v12.0 Copyright © 1988-2025 Causeway Technologies Ltd

Results for 2 year Critical Storm Duration. Lowest mass balance: 99.74%

Node Event	US Node	Peak (mins)	Level (m)	Depth (m)	Inflow (l/s)	Node Vol (m³)	Flood (m³)	Status
15 minute summer	ES2	11	114.498	0.144	109.6	0.5481	0.0000	OK
15 minute summer	ES3	11	115.292	0.132	85.3	0.7971	0.0000	OK
15 minute summer	ES4	11	115.864	0.112	58.8	0.3581	0.0000	OK
15 minute summer	ES5	11	116.709	0.085	44.6	0.3832	0.0000	OK
15 minute summer	ES6	11	117.966	0.073	34.8	0.1095	0.0000	OK
15 minute summer	ES7	11	118.215	0.067	31.9	0.6366	0.0000	OK
15 minute summer	ES8	11	118.720	0.047	10.3	0.0000	0.0000	OK
15 minute summer	ES9	10	118.917	0.045	10.4	0.2025	0.0000	OK
15 minute summer	F6	10	122.100	0.020	2.8	0.0269	0.0000	OK
15 minute summer	F0	10	121.912	0.065	15.4	0.1398	0.0000	OK
15 minute summer	F2	10	120.081	0.106	91.2	0.4175	0.0000	OK
15 minute summer	F3	10	118.535	0.135	105.5	0.3185	0.0000	OK
15 minute summer	F4	10	117.250	0.150	152.8	0.4895	0.0000	OK
15 minute summer	F5	11	115.794	0.362	153.2	0.0000	0.0000	OK

Link Event (Upstream Depth)	US Node	Link	DS Node	Outflow (l/s)	Velocity (m/s)	Flow/Cap	Link Vol (m³)	Discharge Vol (m³)
15 minute summer	ES2	3.007	ES1	109.3	1.184	0.015	2.3682	
15 minute summer	ES3	3.006	ES2	84.7	0.994	0.037	1.7779	
15 minute summer	ES4	3.005	ES3	58.9	0.784	0.026	1.7143	
15 minute summer	ES5	3.004	ES4	44.8	1.035	0.094	0.5776	
15 minute summer	ES6	3.003	ES5	34.9	0.907	0.068	0.9144	
15 minute summer	ES7	3.002	ES6	31.4	0.982	0.057	0.1324	
15 minute summer	ES8	3.001	ES7	10.1	0.426	0.028	0.4852	
15 minute summer	ES9	3.000	ES8	10.3	0.581	0.026	0.1133	
15 minute summer	F6	4.000	F7	1.5	0.340	0.009	0.1028	
15 minute summer	F6	2.000	F0	1.3	0.208	0.009	0.1132	
15 minute summer	F0	2.001	F1	15.1	1.028	0.103	0.4200	
15 minute summer	F2	2.003	F3	90.6	2.976	0.168	0.8617	
15 minute summer	F3	2.004	F4	104.5	2.437	0.187	2.4701	
15 minute summer	F4	2.005	F5	153.2	3.050	0.239	2.8036	
15 minute summer	F5	Flow through pond	C2	348.8	0.218	0.008	56.5263	

Flow+ v12.0 Copyright © 1988-2025 Causeway Technologies Ltd

Results for 2 year Critical Storm Duration. Lowest mass balance: 99.74%

Node Event	US Node	Peak (mins)	Level (m)	Depth (m)	Inflow (l/s)	Node Vol (m³)	Flood (m³)	Status
15 minute summer	F7	10	121.717	0.047	14.1	0.0990	0.0000	OK
15 minute summer	F1	10	121.551	0.092	51.7	0.3759	0.0000	OK
15 minute summer	F8	10	120.575	0.075	41.4	0.2654	0.0000	OK
15 minute summer	F9	10	119.113	0.113	75.9	0.4491	0.0000	OK
30 minute summer	F10	20	118.227	0.227	322.4	0.5303	0.0000	OK
30 minute summer	F11	24	116.658	0.217	324.1	0.0000	0.0000	OK
30 minute summer	I0	20	121.443	0.296	254.6	0.6481	0.0000	OK
30 minute summer	I1	24	120.882	0.237	257.9	0.3680	0.0000	OK
30 minute summer	S-1	22	129.768	0.018	1.3	0.0000	0.0000	OK

Link Event (Upstream Depth)	US Node	Link	DS Node	Outflow (l/s)	Velocity (m/s)	Flow/Cap	Link Vol (m³)	Discharge Vol (m³)
15 minute summer	F7	4.001	F8	13.9	1.358	0.053	0.2794	
15 minute summer	F1	2.002	F2	51.2	2.532	0.199	0.7158	
15 minute summer	F8	4.002	F9	41.0	1.905	0.087	0.7540	
15 minute summer	F9	4.003	F10	75.1	1.988	0.196	1.6459	
30 minute summer	F10	4.004	F11	324.1	4.928	0.579	1.1999	
30 minute summer	F11	Flow through pond	C0	297.8	0.287	0.011	50.3042	
30 minute summer	I0	5.001	I1	255.7	3.061	0.753	1.8812	
30 minute summer	I1	5.002	F10	257.9	4.786	0.365	1.6241	
30 minute summer	S-1	1.000	S0	-1.3	-0.049	-0.013	1.9128	

Flow+ v12.0 Copyright © 1988-2025 Causeway Technologies Ltd

Results for 30 year Critical Storm Duration. Lowest mass balance: 99.74%

Node Event	US Node	Peak (mins)	Level (m)	Depth (m)	Inflow (l/s)	Node Vol (m³)	Flood (m³)	Status
15 minute summer	S1	12	129.788	0.147	76.6	1.5154	0.0000	OK
30 minute summer	S0	20	129.826	0.176	35.1	1.2231	0.0000	OK
15 minute summer	S3	11	127.710	0.322	231.3	2.9398	0.0000	OK
15 minute summer	S2	11	128.952	0.304	133.6	1.9943	0.0000	OK
15 minute summer	S4	11	126.660	0.206	231.0	0.0000	0.0000	OK
15 minute summer	S5	11	126.164	0.209	230.8	0.0000	0.0000	OK
15 minute summer	S6	11	125.302	0.223	228.5	0.0000	0.0000	OK
15 minute summer	S7	11	125.166	0.231	228.1	0.0000	0.0000	OK
15 minute summer	S8	11	125.052	0.807	476.4	5.8949	0.0000	OK
30 minute summer	S12	22	124.798	0.593	519.1	5.8294	0.0000	OK
15 minute summer	S13	13	124.288	0.344	434.4	2.1458	0.0000	OK
15 minute summer	S14	12	123.259	0.266	490.9	1.1221	0.0000	OK
60 minute summer	S15	48	122.525	0.991	547.5	4.3035	0.0000	OK

Link Event (Upstream Depth)	US Node	Link	DS Node	Outflow (l/s)	Velocity (m/s)	Flow/Cap	Link Vol (m³)	Discharge Vol (m³)
15 minute summer	S1	1.002	S2	67.5	0.758	0.273	5.3002	
30 minute summer	S0	1.001	S1	23.2	0.207	0.748	5.3712	
15 minute summer	S3	Weir	S4	231.0				
15 minute summer	S2	Weir	S3	132.6				
15 minute summer	S4	1.005	S5	230.8	1.275	0.034	3.3288	
15 minute summer	S5	1.006	S6	228.5	1.244	0.035	4.6852	
15 minute summer	S6	1.007	S7	228.1	1.076	0.019	1.6557	
15 minute summer	S7	1.008	S8	226.8	1.081	0.021	1.5307	
15 minute summer	S8	Flow through pond	S12	271.5	0.148	0.020	149.4197	
30 minute summer	S12	6.000	S13	345.3	1.386	0.036	5.6686	
15 minute summer	S13	6.001	S14	407.9	1.647	0.026	7.6043	
15 minute summer	S14	6.002	S15	482.0	1.928	0.025	5.4211	
60 minute summer	S15	Flow through pond	S18	349.8	0.109	0.027	366.0850	

Flow+ v12.0 Copyright © 1988-2025 Causeway Technologies Ltd

Results for 30 year Critical Storm Duration. Lowest mass balance: 99.74%

Node Event	US Node	Peak (mins)	Level (m)	Depth (m)	Inflow (l/s)	Node Vol (m³)	Flood (m³)	Status
60 minute summer	S18	48	122.526	1.030	524.3	10.9637	0.0000	SURCHARGED
60 minute summer	C0	54	117.024	0.624	412.8	1.1515	0.0000	SURCHARGED
60 minute summer	C1	54	116.834	1.401	350.0	0.0000	0.0000	OK
30 minute summer	C2	22	115.827	0.427	650.3	1.1774	0.0000	SURCHARGED
60 minute summer	C3	42	114.900	0.481	553.8	0.0000	0.0000	OK
60 minute summer	C4	42	114.900	0.500	549.1	0.6049	0.0000	SURCHARGED
180 minute summer	C5	144	114.042	0.625	482.6	0.0000	0.0000	OK
180 minute summer	C6	144	114.042	0.642	491.0	1.4831	0.0000	SURCHARGED
180 minute summer	C7	152	113.623	1.199	481.7	0.0000	0.0000	OK
180 minute summer	C8	152	113.622	1.222	427.3	3.5383	0.0000	SURCHARGED
240 minute summer	C9	180	113.456	1.972	320.3	0.0000	0.0000	OK
960 minute winter	C10	960	113.429	2.029	107.0	21.4370	0.0000	SURCHARGED
15 minute summer	C11	1	111.350	0.000	12.3	0.0000	0.0000	OK
960 minute winter	ES0	960	113.429	1.944	24.3	0.0000	0.0000	OK
15 minute summer	ES1	11	113.762	0.218	392.3	1.0781	0.0000	OK

Link Event (Upstream Depth)	US Node	Link	DS Node	Outflow (l/s)	Velocity (m/s)	Flow/Cap	Link Vol (m³)	Discharge Vol (m³)
60 minute summer	S18	5.000	I0	327.4	2.969	1.228	2.8120	
60 minute summer	C0	8.000	C1	350.0	2.885	0.465	3.0763	
60 minute summer	C1	Flow through pond	C2	525.6	0.209	0.012	97.6811	
30 minute summer	C2	12.000	C3	549.8	5.338	1.064	1.7158	
60 minute summer	C3	Flow through pond	C4	522.3	0.215	0.013	80.5490	
60 minute summer	C4	9.000	C5	517.9	4.957	1.069	1.9514	
180 minute summer	C5	Flow through pond	C6	463.3	0.291	0.016	83.3134	
180 minute summer	C6	11.000	C7	481.7	5.048	0.973	1.8719	
180 minute summer	C7	Flow through pond	C8	377.5	0.153	0.008	439.3914	
180 minute summer	C8	7.000	C9	332.4	2.545	0.479	3.6200	
240 minute summer	C9	Flow through pond	C10	157.3	0.051	0.001	3560.2571	
960 minute winter	C10	Orifice	C11	17.5				918.2
960 minute winter	ES0	Flow through pond	C10	65.2	0.033	0.001	4142.6777	
15 minute summer	ES1	3.008	ES0	393.4	4.364	0.473	3.5994	

Flow+ v12.0 Copyright © 1988-2025 Causeway Technologies Ltd

Results for 30 year Critical Storm Duration. Lowest mass balance: 99.74%

Node Event	US Node	Peak (mins)	Level (m)	Depth (m)	Inflow (l/s)	Node Vol (m³)	Flood (m³)	Status
15 minute summer	ES2	11	114.568	0.214	273.9	0.8152	0.0000	OK
15 minute summer	ES3	11	115.359	0.199	211.8	1.2030	0.0000	OK
15 minute summer	ES4	11	115.922	0.170	145.3	0.5425	0.0000	OK
15 minute summer	ES5	11	116.754	0.131	111.3	0.5877	0.0000	OK
15 minute summer	ES6	10	118.006	0.113	86.6	0.1694	0.0000	OK
15 minute summer	ES7	10	118.252	0.104	79.0	0.9947	0.0000	OK
15 minute summer	ES8	10	118.747	0.074	25.3	0.0000	0.0000	OK
15 minute summer	ES9	10	118.943	0.071	25.5	0.3216	0.0000	OK
15 minute summer	F6	10	122.111	0.031	6.8	0.0407	0.0000	OK
15 minute summer	F0	10	121.952	0.105	37.8	0.2250	0.0000	OK
15 minute summer	F2	10	120.154	0.179	225.1	0.7065	0.0000	OK
15 minute summer	F3	10	118.628	0.228	260.4	0.5389	0.0000	OK
15 minute summer	F4	10	117.348	0.248	378.5	0.8088	0.0000	OK
15 minute summer	F5	11	116.101	0.668	375.3	0.0000	0.0000	OK

Link Event (Upstream Depth)	US Node	Link	DS Node	Outflow (l/s)	Velocity (m/s)	Flow/Cap	Link Vol (m³)	Discharge Vol (m³)
15 minute summer	ES2	3.007	ES1	274.4	1.410	0.037	4.9902	
15 minute summer	ES3	3.006	ES2	212.3	1.259	0.093	3.5219	
15 minute summer	ES4	3.005	ES3	146.0	0.988	0.064	3.3799	
15 minute summer	ES5	3.004	ES4	110.8	1.312	0.232	1.1256	
15 minute summer	ES6	3.003	ES5	85.9	1.149	0.168	1.7758	
15 minute summer	ES7	3.002	ES6	78.1	1.251	0.142	0.2578	
15 minute summer	ES8	3.001	ES7	25.0	0.543	0.070	0.9414	
15 minute summer	ES9	3.000	ES8	25.3	0.745	0.065	0.2179	
15 minute summer	F6	4.000	F7	3.6	0.441	0.021	0.1943	
15 minute summer	F6	2.000	F0	3.1	0.263	0.021	0.2191	
15 minute summer	F0	2.001	F1	37.4	1.280	0.254	0.8334	
15 minute summer	F2	2.003	F3	223.8	3.668	0.416	1.7215	
15 minute summer	F3	2.004	F4	258.7	3.042	0.463	4.8805	
15 minute summer	F4	2.005	F5	375.3	3.081	0.585	6.2237	
15 minute summer	F5	Flow through pond	C2	570.8	0.249	0.013	112.8134	

Flow+ v12.0 Copyright © 1988-2025 Causeway Technologies Ltd

Results for 30 year Critical Storm Duration. Lowest mass balance: 99.74%

Node Event	US Node	Peak (mins)	Level (m)	Depth (m)	Inflow (l/s)	Node Vol (m³)	Flood (m³)	Status
15 minute summer	F7	10	121.744	0.074	34.7	0.1547	0.0000	OK
15 minute summer	F1	10	121.615	0.156	127.5	0.6336	0.0000	OK
15 minute summer	F8	10	120.618	0.118	102.1	0.4188	0.0000	OK
15 minute summer	F9	10	119.188	0.188	187.2	0.7482	0.0000	OK
15 minute summer	F10	12	118.503	0.503	527.2	1.1740	0.0000	SURCHARGED
60 minute summer	F11	54	117.025	0.585	458.9	0.0000	0.0000	OK
60 minute summer	I0	48	121.727	0.580	331.5	1.2698	0.0000	SURCHARGED
60 minute summer	I1	49	120.912	0.267	332.4	0.4145	0.0000	OK
15 minute summer	S-1	13	129.830	0.080	7.2	0.0000	0.0000	OK

Link Event (Upstream Depth)	US Node	Link	DS Node	Outflow (l/s)	Velocity (m/s)	Flow/Cap	Link Vol (m³)	Discharge Vol (m³)
15 minute summer	F7	4.001	F8	34.5	1.776	0.131	0.5266	
15 minute summer	F1	2.002	F2	126.6	3.142	0.491	1.4248	
15 minute summer	F8	4.002	F9	101.4	2.398	0.214	1.4735	
15 minute summer	F9	4.003	F10	185.8	2.251	0.485	2.9247	
15 minute summer	F10	4.004	F11	515.0	5.294	0.920	1.8224	
60 minute summer	F11	Flow through pond	C0	368.8	0.279	0.014	166.5408	
60 minute summer	I0	5.001	I1	331.5	3.154	0.976	2.1997	
60 minute summer	I1	5.002	F10	332.3	5.026	0.470	2.0528	
15 minute summer	S-1	1.000	S0	-7.2	-0.117	-0.073	4.4036	

Flow+ v12.0 Copyright © 1988-2025 Causeway Technologies Ltd

Results for 100 year Critical Storm Duration. Lowest mass balance: 99.74%

Node Event	US Node	Peak (mins)	Level (m)	Depth (m)	Inflow (l/s)	Node Vol (m³)	Flood (m³)	Status
15 minute summer	S1	12	129.805	0.164	96.8	1.6900	0.0000	OK
30 minute summer	S0	20	129.846	0.196	44.5	1.3616	0.0000	OK
15 minute summer	S3	11	127.765	0.377	293.1	3.4438	0.0000	OK
15 minute summer	S2	11	129.006	0.358	170.6	2.3489	0.0000	OK
15 minute summer	S4	11	126.682	0.228	292.9	0.0000	0.0000	OK
15 minute summer	S5	11	126.187	0.232	292.7	0.0000	0.0000	OK
15 minute summer	S6	12	125.438	0.359	290.5	0.0000	0.0000	OK
15 minute summer	S7	12	125.309	0.374	284.2	0.0000	0.0000	OK
15 minute summer	S8	12	125.187	0.942	581.2	6.8835	0.0000	OK
30 minute summer	S12	23	124.966	0.761	607.3	7.4895	0.0000	OK
30 minute summer	S13	21	124.440	0.496	463.5	3.0970	0.0000	OK
30 minute summer	S14	22	123.398	0.405	515.4	1.7088	0.0000	OK
60 minute summer	S15	54	122.755	1.221	599.8	5.3021	0.0000	OK

Link Event (Upstream Depth)	US Node	Link	DS Node	Outflow (l/s)	Velocity (m/s)	Flow/Cap	Link Vol (m³)	Discharge Vol (m³)
15 minute summer	S1	1.002	S2	86.8	0.808	0.351	6.3883	
30 minute summer	S0	1.001	S1	30.7	0.227	0.989	6.4427	
15 minute summer	S3	Weir	S4	292.9				
15 minute summer	S2	Weir	S3	169.5				
15 minute summer	S4	1.005	S5	292.7	1.353	0.043	3.9788	
15 minute summer	S5	1.006	S6	290.5	1.322	0.045	5.6053	
15 minute summer	S6	1.007	S7	284.2	1.137	0.023	1.9527	
15 minute summer	S7	1.008	S8	286.5	1.146	0.026	1.8030	
15 minute summer	S8	Flow through pond	S12	318.9	0.151	0.023	211.9827	
30 minute summer	S12	6.000	S13	350.2	1.401	0.037	5.6686	
30 minute summer	S13	6.001	S14	410.7	1.643	0.026	7.6043	
30 minute summer	S14	6.002	S15	482.3	1.929	0.025	5.4211	
60 minute summer	S15	Flow through pond	S18	363.9	0.107	0.028	499.7215	

Flow+ v12.0 Copyright © 1988-2025 Causeway Technologies Ltd

Results for 100 year Critical Storm Duration. Lowest mass balance: 99.74%

Node Event	US Node	Peak (mins)	Level (m)	Depth (m)	Inflow (l/s)	Node Vol (m³)	Flood (m³)	Status
60 minute summer	S18	54	122.755	1.259	575.3	13.4042	0.0000	SURCHARGED
60 minute summer	C0	61	117.218	0.817	448.3	1.5074	0.0000	SURCHARGED
60 minute summer	C1	61	117.002	1.569	372.6	0.0000	0.0000	OK
30 minute summer	C2	22	115.930	0.530	697.2	1.4609	0.0000	SURCHARGED
60 minute summer	C3	53	115.017	0.598	553.5	0.0000	0.0000	OK
60 minute summer	C4	53	115.016	0.616	556.4	0.7464	0.0000	SURCHARGED
180 minute summer	C5	164	114.346	0.928	514.3	0.0000	0.0000	OK
180 minute summer	C6	164	114.346	0.946	503.3	2.1852	0.0000	SURCHARGED
180 minute summer	C7	172	113.919	1.496	486.6	0.0000	0.0000	OK
180 minute summer	C8	172	113.919	1.519	434.1	4.3973	0.0000	SURCHARGED
240 minute summer	C9	200	113.756	2.272	323.8	0.0000	0.0000	OK
960 minute winter	C10	960	113.726	2.326	130.3	24.5812	0.0000	SURCHARGED
15 minute summer	C11	1	111.350	0.000	13.3	0.0000	0.0000	OK
960 minute winter	ES0	960	113.726	2.242	30.0	0.0000	0.0000	OK
15 minute summer	ES1	11	113.842	0.299	491.4	1.4765	0.0000	OK

Link Event (Upstream Depth)	US Node	Link	DS Node	Outflow (l/s)	Velocity (m/s)	Flow/Cap	Link Vol (m³)	Discharge Vol (m³)
60 minute summer	S18	5.000	I0	350.3	3.176	1.314	2.8120	
60 minute summer	C0	8.000	C1	372.6	2.895	0.495	3.0763	
60 minute summer	C1	Flow through pond	C2	550.3	0.209	0.013	143.2260	
30 minute summer	C2	12.000	C3	552.2	5.174	1.068	1.7158	
60 minute summer	C3	Flow through pond	C4	519.5	0.215	0.013	106.9754	
60 minute summer	C4	9.000	C5	517.9	4.947	1.068	1.9514	
180 minute summer	C5	Flow through pond	C6	468.8	0.291	0.017	153.2339	
180 minute summer	C6	11.000	C7	486.6	4.974	0.983	1.8719	
180 minute summer	C7	Flow through pond	C8	371.9	0.155	0.008	620.7397	
180 minute summer	C8	7.000	C9	331.0	2.533	0.477	3.6200	
240 minute summer	C9	Flow through pond	C10	156.9	0.053	0.001	4393.7017	
960 minute winter	C10	Orifice	C11	18.7				991.6
960 minute winter	ES0	Flow through pond	C10	73.4	0.037	0.001	5089.6865	
15 minute summer	ES1	3.008	ES0	478.9	4.632	0.576	4.1456	

Flow+ v12.0 Copyright © 1988-2025 Causeway Technologies Ltd

Results for 100 year Critical Storm Duration. Lowest mass balance: 99.74%

Node Event	US Node	Peak (mins)	Level (m)	Depth (m)	Inflow (l/s)	Node Vol (m³)	Flood (m³)	Status
15 minute summer	ES2	11	114.592	0.238	343.6	0.9052	0.0000	OK
15 minute summer	ES3	11	115.380	0.220	266.4	1.3277	0.0000	OK
15 minute summer	ES4	11	115.939	0.187	182.6	0.5994	0.0000	OK
15 minute summer	ES5	11	116.768	0.145	139.7	0.6514	0.0000	OK
15 minute summer	ES6	10	118.018	0.125	108.7	0.1884	0.0000	OK
15 minute summer	ES7	10	118.264	0.116	99.0	1.1068	0.0000	OK
15 minute summer	ES8	10	118.756	0.083	31.8	0.0000	0.0000	OK
15 minute summer	ES9	10	118.952	0.080	32.0	0.3600	0.0000	OK
15 minute summer	F6	10	122.114	0.034	8.5	0.0453	0.0000	OK
15 minute summer	F0	10	121.967	0.120	47.4	0.2577	0.0000	OK
15 minute summer	F2	10	120.183	0.208	282.0	0.8208	0.0000	OK
15 minute summer	F3	10	118.663	0.263	326.3	0.6205	0.0000	OK
15 minute summer	F4	10	117.403	0.303	474.6	0.9875	0.0000	OK
15 minute summer	F5	11	116.213	0.780	469.9	0.0000	0.0000	OK

Link Event (Upstream Depth)	US Node	Link	DS Node	Outflow (l/s)	Velocity (m/s)	Flow/Cap	Link Vol (m³)	Discharge Vol (m³)
15 minute summer	ES2	3.007	ES1	343.7	1.434	0.047	6.1457	
15 minute summer	ES3	3.006	ES2	266.4	1.334	0.116	4.1713	
15 minute summer	ES4	3.005	ES3	182.8	1.046	0.081	4.0004	
15 minute summer	ES5	3.004	ES4	138.7	1.391	0.291	1.3301	
15 minute summer	ES6	3.003	ES5	107.9	1.219	0.211	2.0976	
15 minute summer	ES7	3.002	ES6	98.0	1.327	0.178	0.3050	
15 minute summer	ES8	3.001	ES7	31.4	0.576	0.088	1.1126	
15 minute summer	ES9	3.000	ES8	31.8	0.792	0.082	0.2572	
15 minute summer	F6	4.000	F7	4.5	0.469	0.027	0.2280	
15 minute summer	F6	2.000	F0	3.9	0.274	0.027	0.2621	
15 minute summer	F0	2.001	F1	46.9	1.331	0.319	1.0018	
15 minute summer	F2	2.003	F3	280.4	3.855	0.521	2.0478	
15 minute summer	F3	2.004	F4	324.5	3.095	0.581	6.0076	
15 minute summer	F4	2.005	F5	469.9	3.163	0.733	6.8239	
15 minute summer	F5	Flow through pond	C2	606.1	0.250	0.014	147.5148	

Flow+ v12.0 Copyright © 1988-2025 Causeway Technologies Ltd

Results for 100 year Critical Storm Duration. Lowest mass balance: 99.74%

Node Event	US Node	Peak (mins)	Level (m)	Depth (m)	Inflow (l/s)	Node Vol (m³)	Flood (m³)	Status
15 minute summer	F7	10	121.753	0.083	43.5	0.1734	0.0000	OK
15 minute summer	F1	10	121.640	0.181	159.8	0.7362	0.0000	OK
15 minute summer	F8	10	120.633	0.133	127.9	0.4715	0.0000	OK
15 minute summer	F9	11	119.299	0.299	234.6	1.1869	0.0000	OK
15 minute summer	F10	11	118.902	0.902	593.8	2.1069	0.0000	SURCHARGED
60 minute summer	F11	61	117.217	0.777	516.1	0.0000	0.0000	OK
60 minute winter	I0	53	121.841	0.694	354.5	1.5197	0.0000	SURCHARGED
60 minute summer	I1	55	120.922	0.277	355.2	0.4293	0.0000	OK
15 minute summer	S-1	13	129.851	0.101	9.8	0.0000	0.0000	OK

Link Event (Upstream Depth)	US Node	Link	DS Node	Outflow (l/s)	Velocity (m/s)	Flow/Cap	Link Vol (m³)	Discharge Vol (m³)
15 minute summer	F7	4.001	F8	43.2	1.898	0.165	0.6170	
15 minute summer	F1	2.002	F2	158.5	3.291	0.616	1.7030	
15 minute summer	F8	4.002	F9	127.2	2.440	0.268	2.2228	
15 minute summer	F9	4.003	F10	221.9	2.310	0.579	3.6130	
15 minute summer	F10	4.004	F11	586.4	5.333	1.048	2.0126	
60 minute summer	F11	Flow through pond	C0	413.3	0.274	0.015	242.9980	
60 minute winter	I0	5.001	I1	354.4	3.341	1.044	2.2348	
60 minute summer	I1	5.002	F10	355.2	5.228	0.502	2.3184	
15 minute summer	S-1	1.000	S0	-9.8	-0.134	-0.100	5.4618	

Flow+ v12.0 Copyright © 1988-2025 Causeway Technologies Ltd

Results for 100 year +40% CC Critical Storm Duration. Lowest mass balance: 99.74%

Node Event	US Node	Peak (mins)	Level (m)	Depth (m)	Inflow (l/s)	Node Vol (m³)	Flood (m³)	Status
15 minute summer	S1	11	129.831	0.190	136.7	1.9555	0.0000	OK
30 minute summer	S0	20	129.878	0.228	62.3	1.5857	0.0000	OK
15 minute summer	S3	11	127.864	0.476	415.5	4.3447	0.0000	OK
15 minute summer	S2	11	129.103	0.455	254.8	2.9823	0.0000	OK
15 minute summer	S4	12	126.906	0.452	415.0	0.0000	0.0000	OK
15 minute summer	S5	13	126.382	0.427	386.5	0.0000	0.0000	OK
15 minute summer	S6	13	125.735	0.656	350.9	0.0000	0.0000	OK
30 minute summer	S7	21	125.545	0.610	338.1	0.0000	0.0000	OK
15 minute summer	S8	12	125.383	1.138	750.2	8.3118	0.0000	OK
30 minute summer	S12	25	125.260	1.055	753.3	10.3747	0.0000	FLOOD RISK
30 minute summer	S13	22	124.741	0.797	516.7	4.9774	0.0000	OK
60 minute summer	S14	41	123.700	0.707	518.1	2.9813	0.0000	OK
60 minute winter	S15	62	123.062	1.528	575.0	6.6316	0.0000	OK

Link Event (Upstream Depth)	US Node	Link	DS Node	Outflow (l/s)	Velocity (m/s)	Flow/Cap	Link Vol (m³)	Discharge Vol (m³)
15 minute summer	S1	1.002	S2	130.7	0.849	0.528	9.8502	
30 minute summer	S0	1.001	S1	46.3	0.263	1.491	8.2282	
15 minute summer	S3	Weir	S4	415.0				
15 minute summer	S2	Weir	S3	242.7				
15 minute summer	S4	1.005	S5	386.5	1.546	0.057	4.5968	
15 minute summer	S5	1.006	S6	350.9	1.404	0.054	6.3745	
15 minute summer	S6	1.007	S7	354.6	1.419	0.029	1.9527	
30 minute summer	S7	1.008	S8	338.9	1.356	0.031	1.8030	
15 minute summer	S8	Flow through pond	S12	349.2	0.145	0.026	351.1758	
30 minute summer	S12	6.000	S13	354.0	1.416	0.037	5.6686	
30 minute summer	S13	6.001	S14	415.8	1.663	0.026	7.6043	
60 minute summer	S14	6.002	S15	468.6	1.902	0.024	5.4211	
60 minute winter	S15	Flow through pond	S18	371.7	0.108	0.029	703.9365	

Flow+ v12.0 Copyright © 1988-2025 Causeway Technologies Ltd

Results for 100 year +40% CC Critical Storm Duration. Lowest mass balance: 99.74%

Node Event	US Node	Peak (mins)	Level (m)	Depth (m)	Inflow (l/s)	Node Vol (m³)	Flood (m³)	Status
60 minute winter	S18	61	123.062	1.566	584.2	16.6688	0.0000	FLOOD RISK
120 minute summer	C0	112	117.570	1.170	449.6	2.1577	0.0000	SURCHARGED
120 minute summer	C1	112	117.333	1.901	390.5	0.0000	0.0000	OK
30 minute summer	C2	23	116.115	0.715	823.1	1.9715	0.0000	SURCHARGED
240 minute summer	C3	228	115.345	0.926	550.8	0.0000	0.0000	OK
240 minute summer	C4	228	115.345	0.945	522.5	1.1443	0.0000	SURCHARGED
240 minute summer	C5	232	114.845	1.427	511.1	0.0000	0.0000	OK
240 minute summer	C6	232	114.845	1.445	491.2	3.3362	0.0000	FLOOD RISK
240 minute summer	C7	244	114.443	2.020	452.5	0.0000	0.0000	OK
240 minute summer	C8	244	114.443	2.043	409.8	5.9135	0.0000	FLOOD RISK
10080 minute summer	C9	6660	114.313	2.828	56.8	0.0000	0.0000	OK
10080 minute summer	C10	6840	114.326	2.926	54.1	30.9193	0.0000	SURCHARGED
15 minute summer	C11	1	111.350	0.000	15.0	0.0000	0.0000	OK
10080 minute summer	ES0	6840	114.325	2.840	14.9	0.0000	0.0000	OK
10080 minute summer	ES1	6840	114.324	0.781	10.8	3.8542	0.0000	SURCHARGED

Link Event (Upstream Depth)	US Node	Link	DS Node	Outflow (l/s)	Velocity (m/s)	Flow/Cap	Link Vol (m³)	Discharge Vol (m³)
60 minute winter	S18	5.000	I0	380.3	3.449	1.426	2.8120	
120 minute summer	C0	8.000	C1	390.5	2.826	0.519	3.0763	
120 minute summer	C1	Flow through pond	C2	544.9	0.204	0.013	182.6695	
30 minute summer	C2	12.000	C3	602.5	5.463	1.166	1.7158	
240 minute summer	C3	Flow through pond	C4	502.6	0.211	0.013	196.7082	
240 minute summer	C4	9.000	C5	511.1	4.975	1.054	1.9514	
240 minute summer	C5	Flow through pond	C6	453.3	0.292	0.016	309.7211	
240 minute summer	C6	11.000	C7	452.5	4.942	0.914	1.8719	
240 minute summer	C7	Flow through pond	C8	350.4	0.151	0.008	981.1068	
240 minute summer	C8	7.000	C9	315.1	2.365	0.454	3.6200	
10080 minute summer	C9	Flow through pond	C10	42.2	0.017	0.000	7259.0630	
10080 minute summer	C10	Orifice	C11	21.0				9132.0
10080 minute summer	ES0	Flow through pond	C10	42.2	0.017	0.000	7259.0630	
10080 minute summer	ES1	3.008	ES0	14.9	1.062	0.018	4.8587	

Flow+ v12.0 Copyright © 1988-2025 Causeway Technologies Ltd

Results for 100 year +40% CC Critical Storm Duration. Lowest mass balance: 99.74%

Node Event	US Node	Peak (mins)	Level (m)	Depth (m)	Inflow (l/s)	Node Vol (m³)	Flood (m³)	Status
15 minute summer	ES2	13	115.033	0.679	473.5	2.5832	0.0000	OK
15 minute summer	ES3	12	115.461	0.301	374.5	1.8164	0.0000	OK
15 minute summer	ES4	11	115.969	0.217	256.7	0.6940	0.0000	OK
15 minute summer	ES5	10	116.792	0.169	196.0	0.7573	0.0000	OK
15 minute summer	ES6	10	118.039	0.146	152.5	0.2201	0.0000	OK
15 minute summer	ES7	10	118.284	0.136	138.7	1.2949	0.0000	OK
15 minute summer	ES8	10	118.771	0.098	44.5	0.0000	0.0000	OK
15 minute summer	ES9	10	118.966	0.094	44.8	0.4240	0.0000	OK
15 minute summer	F6	10	122.120	0.040	11.9	0.0531	0.0000	OK
15 minute summer	F0	10	121.997	0.150	66.3	0.3219	0.0000	OK
15 minute summer	F2	11	120.289	0.314	394.2	1.2413	0.0000	OK
15 minute summer	F3	11	119.247	0.847	456.3	1.9993	0.0000	SURCHARGED
15 minute summer	F4	11	118.186	1.086	634.2	3.5373	0.0000	SURCHARGED
15 minute summer	F5	12	116.403	0.971	628.4	0.0000	0.0000	OK

Link Event (Upstream Depth)	US Node	Link	DS Node	Outflow (l/s)	Velocity (m/s)	Flow/Cap	Link Vol (m³)	Discharge Vol (m³)
15 minute summer	ES2	3.007	ES1	380.2	1.521	0.052	6.4087	
15 minute summer	ES3	3.006	ES2	360.3	1.441	0.157	5.2208	
15 minute summer	ES4	3.005	ES3	255.7	1.153	0.113	5.0646	
15 minute summer	ES5	3.004	ES4	194.0	1.516	0.407	1.7065	
15 minute summer	ES6	3.003	ES5	151.5	1.328	0.296	2.7011	
15 minute summer	ES7	3.002	ES6	137.6	1.448	0.250	0.3922	
15 minute summer	ES8	3.001	ES7	44.1	0.629	0.123	1.4290	
15 minute summer	ES9	3.000	ES8	44.5	0.866	0.114	0.3296	
15 minute summer	F6	4.000	F7	6.3	0.517	0.037	0.2897	
15 minute summer	F6	2.000	F0	5.5	0.288	0.037	0.3478	
15 minute summer	F0	2.001	F1	65.6	1.404	0.446	1.3508	
15 minute summer	F2	2.003	F3	392.0	4.029	0.728	2.9479	
15 minute summer	F3	2.004	F4	433.9	3.012	0.777	9.0756	
15 minute summer	F4	2.005	F5	628.4	3.967	0.980	7.9475	
15 minute summer	F5	Flow through pond	C2	680.1	0.248	0.016	220.0747	

Flow+ v12.0 Copyright © 1988-2025 Causeway Technologies Ltd

Results for 100 year +40% CC Critical Storm Duration. Lowest mass balance: 99.74%

Node Event	US Node	Peak (mins)	Level (m)	Depth (m)	Inflow (l/s)	Node Vol (m³)	Flood (m³)	Status
15 minute summer	F7	10	121.768	0.098	60.8	0.2063	0.0000	OK
15 minute summer	F1	10	121.698	0.239	223.6	0.9719	0.0000	OK
15 minute summer	F8	11	120.717	0.217	179.0	0.7677	0.0000	OK
15 minute summer	F9	12	120.408	1.408	318.1	5.5978	0.0000	FLOOD RISK
15 minute summer	F10	12	119.643	1.643	706.6	3.8361	0.0000	SURCHARGED
120 minute summer	F11	112	117.570	1.130	528.6	0.0000	0.0000	OK
60 minute winter	I0	59	121.992	0.845	382.8	1.8502	0.0000	SURCHARGED
15 minute summer	I1	12	120.971	0.326	359.8	0.5059	0.0000	OK
15 minute summer	S-1	13	129.881	0.131	14.5	0.0000	0.0000	OK

Link Event (Upstream Depth)	US Node	Link	DS Node	Outflow (l/s)	Velocity (m/s)	Flow/Cap	Link Vol (m³)	Discharge Vol (m³)
15 minute summer	F7	4.001	F8	60.5	2.049	0.231	0.9949	
15 minute summer	F1	2.002	F2	221.3	3.501	0.859	2.2593	
15 minute summer	F8	4.002	F9	167.7	2.461	0.354	3.0535	
15 minute summer	F9	4.003	F10	286.4	2.597	0.747	3.8996	
15 minute summer	F10	4.004	F11	704.3	6.386	1.258	2.0037	
120 minute summer	F11	Flow through pond	C0	412.3	0.267	0.015	412.1722	
60 minute winter	I0	5.001	I1	382.8	3.591	1.128	2.2583	
15 minute summer	I1	5.002	F10	359.9	5.279	0.509	2.6695	
15 minute summer	S-1	1.000	S0	-14.5	-0.154	-0.148	7.4692	

Flow+ v12.0 Copyright © 1988-2025 Causeway Technologies Ltd

Water Quality

Area (ha)	Intended Land Use	Entering via Node or Link	Name	SuDS Component	Pollution hazard indices			Pollution mitigation indices			Cumulative pollution hazard indices		
					TSS	Metals	Hydrocarbons	TSS	Metals	Hydrocarbons	TSS	Metals	Hydrocarbons
		Link	3.000	Swale				0.5	0.6	0.6			
		Link	3.001	Swale				0.25	0.3	0.3			
		Link	3.002	Swale				0.25	0.3	0.3			
		Link	3.003	Swale				0.25	0.3	0.3			
		Link	3.004	Swale				0.25	0.3	0.3			
		Link	3.005	Swale				0.25	0.3	0.3			
		Link	3.006	Swale				0.25	0.3	0.3			
		Link	3.007	Swale				0.25	0.3	0.3			
		Link	1.000	Swale				0.5	0.6	0.6			
		Link	1.001	Swale				0.25	0.3	0.3			
		Link	1.002	Swale				0.25	0.3	0.3			
		Link	1.003	Swale				0.25	0.3	0.3			
		Link	1.004	Swale				0.25	0.3	0.3			
		Link	1.005	Swale				0.25	0.3	0.3			
		Link	1.006	Swale				0.25	0.3	0.3			
		Link	1.007	Swale				0.25	0.3	0.3			
		Link	1.008	Swale				0.25	0.3	0.3			
		Node	S12	Detention Basin				0.25	0.25	0.3			
		Link	6.000	Swale				0.25	0.3	0.3			
		Link	6.001	Swale				0.25	0.3	0.3			
		Link	6.002	Swale				0.25	0.3	0.3			
		Node	C0	Detention Basin				0.25	0.25	0.3			
		Node	C2	Detention Basin				0.25	0.25	0.3			
		Node	C4	Detention Basin				0.25	0.25	0.3			
		Node	C6	Detention Basin				0.25	0.25	0.3			
		Node	C8	Detention Basin				0.25	0.25	0.3			
		Node	C10	Detention Basin				0.25	0.25	0.3			
		Node	C11								Sufficient	Sufficient	Sufficient

Flow+ v12.0 Copyright © 1988-2025 Causeway Technologies Ltd

Water Quality

Area (ha)	Intended Land Use	Entering via Node or Link	Name	SuDS Component	Pollution hazard indices			Pollution mitigation indices			Cumulative pollution hazard indices		
					TSS	Metals	Hydrocarbons	TSS	Metals	Hydrocarbons	TSS	Metals	Hydrocarbons

Flow+ v12.0 Copyright © 1988-2025 Causeway Technologies Ltd

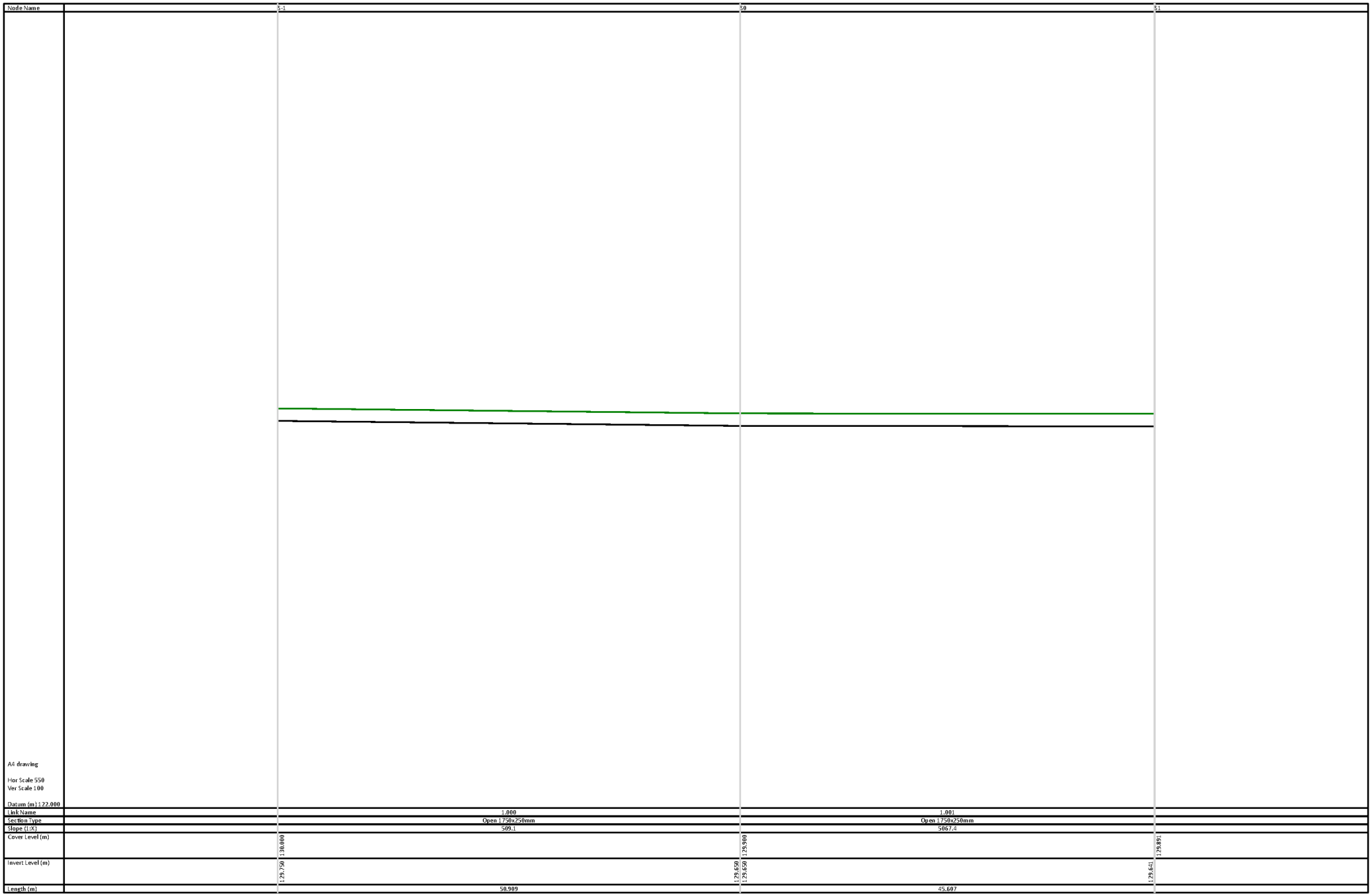

Node Name	S-1	50	S1
A4 drawing Hor Scale 550 Ver Scale 100 Datum (m) 122.000			
Link Name	1.000	1.001	
Section Type	Open 1750x250mm	Open 1750x250mm	
Slope (1:X)	509.1	5067.4	
Cover Level (m)	130.000	129.900	129.891
Invert Level (m)	129.750	129.650	129.641
Length (m)	50.909	45.607	

Flow+ v12.0 Copyright © 1988-2025 Causeway Technologies Ltd

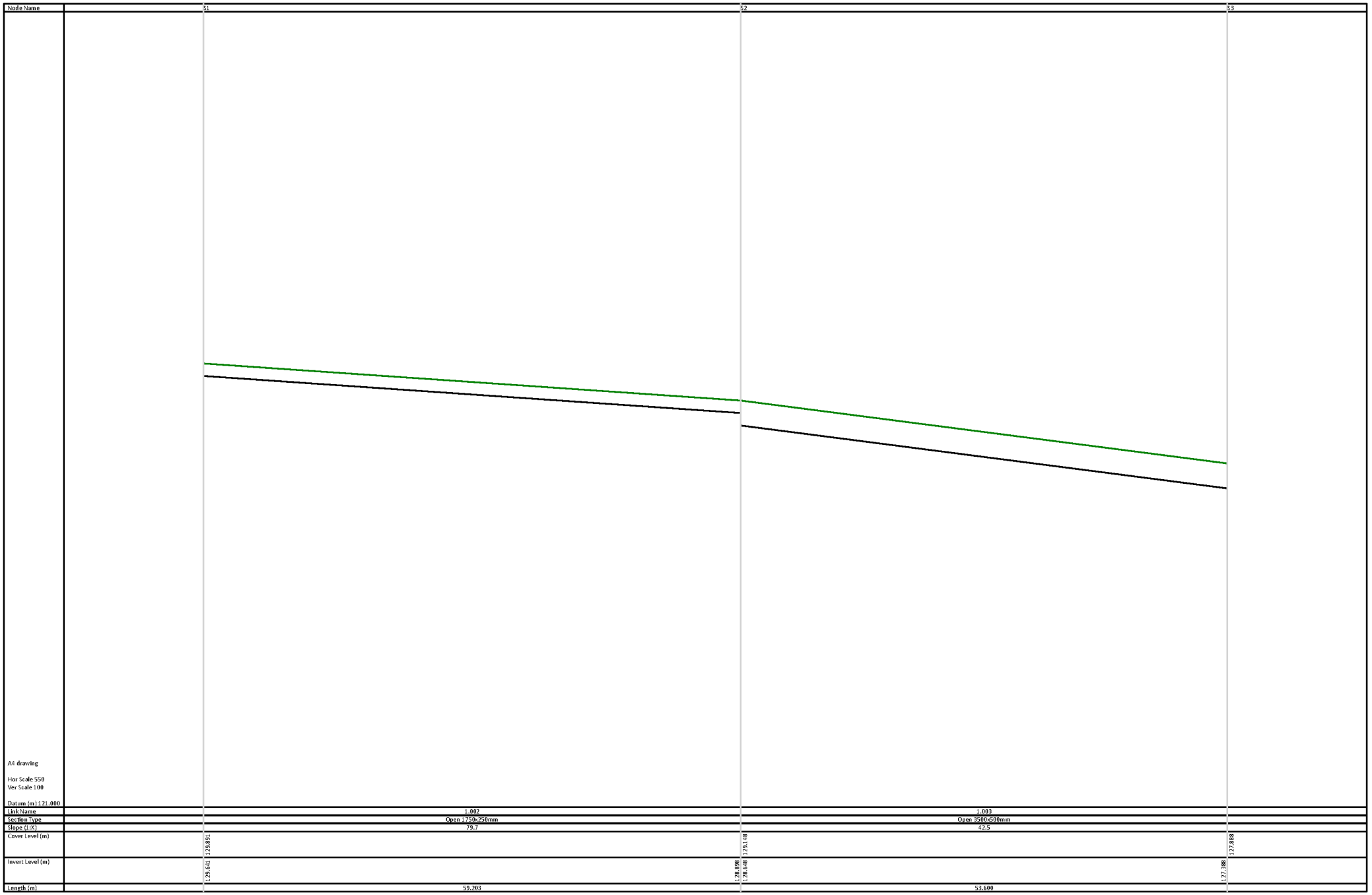

Node Name	S1	S2	S3
Link Name	1.002	1.003	
Section Type	Open 1750x250mm	Open 3500x500mm	
Slope (1:X)	79.7	42.5	
Cover Level (m)	129.891	129.148	127.888
Invert Level (m)	129.641	128.898 128.648	127.388
Length (m)	59.203	53.600	

Flow+ v12.0 Copyright © 1988-2025 Causeway Technologies Ltd

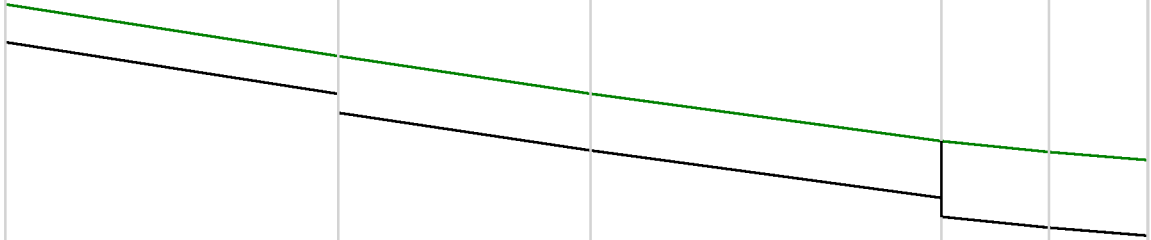

Node Name	S3	S4	S5	S6	S7	S8
A4 drawing Hor Scale 550 Ver Scale 100 Datum (m) 118.000						
Link Name	1.004	1.005	1.006	1.007	1.008	
Section Type	Open 3500x500mm	Open 5250x750mm	Open 5250x750mm	Open 7000x1000mm	Open 7000x1000mm	
Slope (1:X)	35.4	36.8	40.7	54.2	67.4	
Cover Level (m)	127.888	127.204	126.705	126.079	125.935	125.828
Invert Level (m)	127.388	126.704 126.454	125.955 125.595	125.329 125.079	124.935 124.935	124.828
Length (m)	24.207	18.385	25.495	7.810	7.211	

Flow+ v12.0 Copyright © 1988-2025 Causeway Technologies Ltd

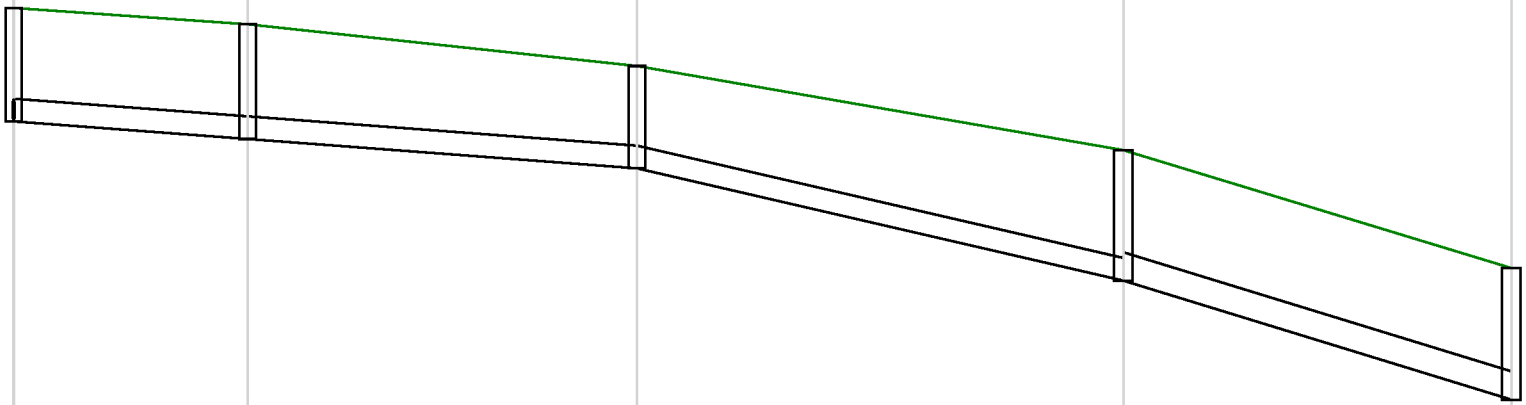

Node Name	F6		F0		F1		F2		F3
A4 drawing Hor Scale 550 Ver Scale 100 Datum (m) 113.000									
Link Name		2.000		2.001		2.002		2.003	
Section Type		300mm		300mm		300mm		375mm	
Slope (1:X)		73.1		73.0		23.8		17.9	
Cover Level (m)	123.580		123.364		122.812		121.700		120.140
Invert Level (m)	122.080		121.847	121.847	121.459	121.459	119.975	119.975	118.400
Length (m)		17.029		28.320		35.355		28.231	

Flow+ v12.0 Copyright © 1988-2025 Causeway Technologies Ltd

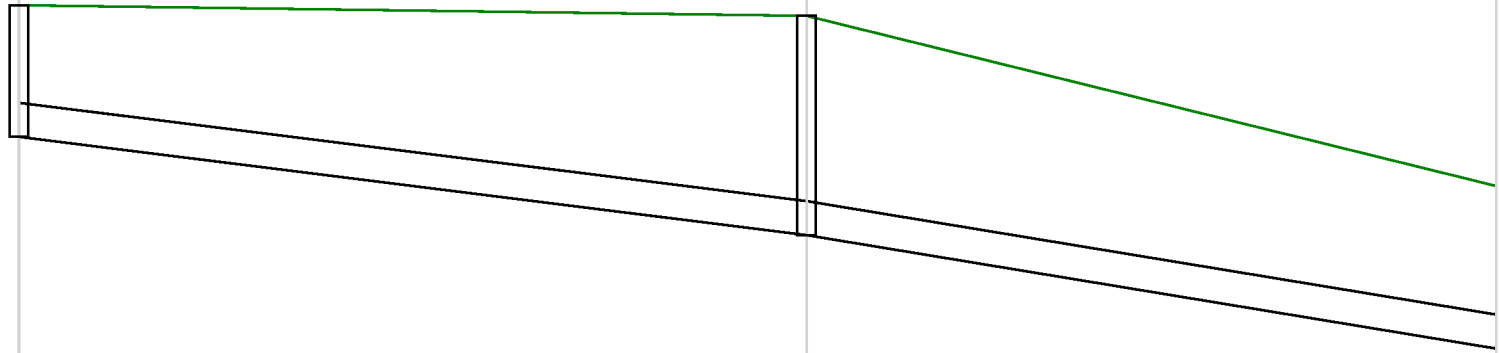

Node Name	F3	F4	F5
A4 drawing Hor Scale 550 Ver Scale 100 Datum (m) 110.000			
Link Name	2.004	2.005	
Section Type	450mm	450mm	
Slope (1:X)	44.1	33.4	
Cover Level (m)	120.140	120.000	117.750
Invert Level (m)	118.400	117.100	115.600
Length (m)	57.280	50.160	

Flow+ v12.0 Copyright © 1988-2025 Causeway Technologies Ltd

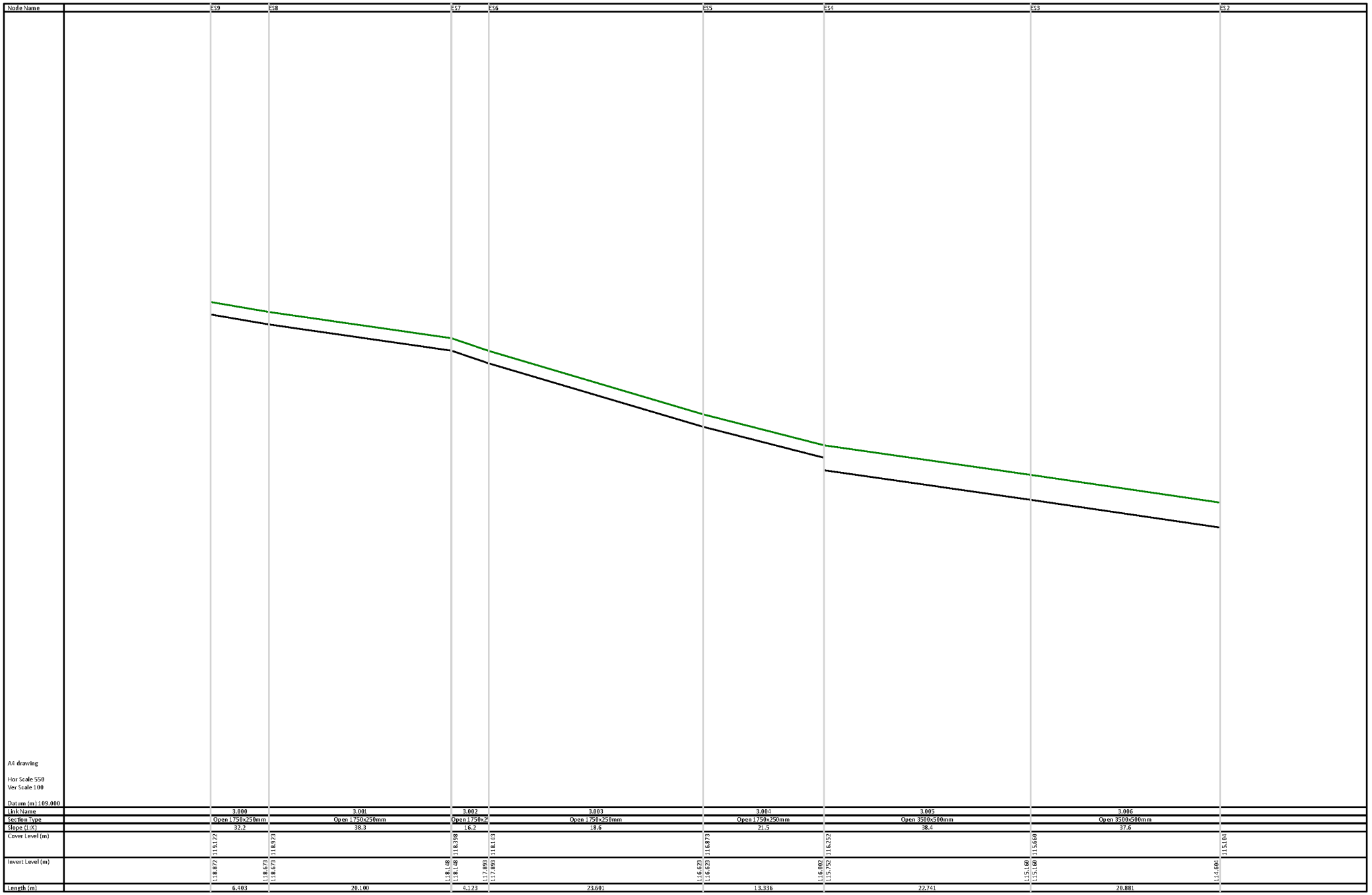

Link Name	3.000	3.001	3.002	3.003	3.004	3.005	3.006
Section Type	Open 1750x250mm	Open 1750x250mm	Open 1750x2	Open 1750x250mm	Open 1750x250mm	Open 3500x500mm	Open 3500x500mm
Slope (1:X)	32.2	38.3	16.2	18.6	21.5	38.4	37.6
Cover Level (m)	119.122	118.923	118.398	118.143	116.873	116.252	115.660	115.104
Invert Level (m)	118.872	118.673	118.148	117.893	116.623	116.002	115.410	115.160	114.604
Length (m)	6.403	20.100	4.123	23.601	13.336	22.741	20.881

Flow+ v12.0 Copyright © 1988-2025 Causeway Technologies Ltd

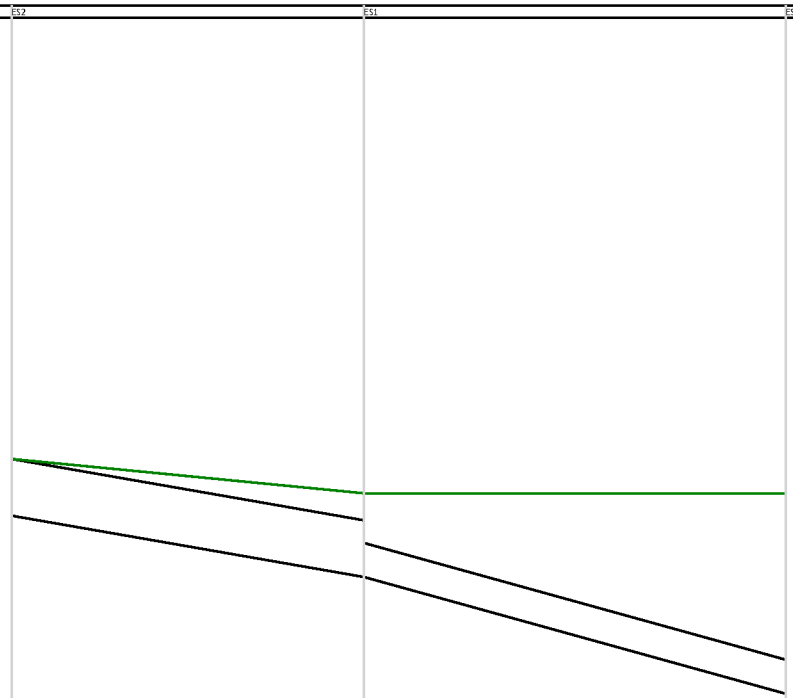

Node Name	ES2	ES1	ES0
A4 drawing Hor Scale 550 Ver Scale 100 Datum (m) 105.000			
Link Name	3.007	3.008	
Section Type	Open 5250x750mm	450mm	
Slope (1:X)	31.6	19.9	
Cover Level (m)	115.104	114.650	114.650
Invert Level (m)	114.354	113.543 / 113.543	112.000
Length (m)	25.632	30.665	

Flow+ v12.0 Copyright © 1988-2025 Causeway Technologies Ltd

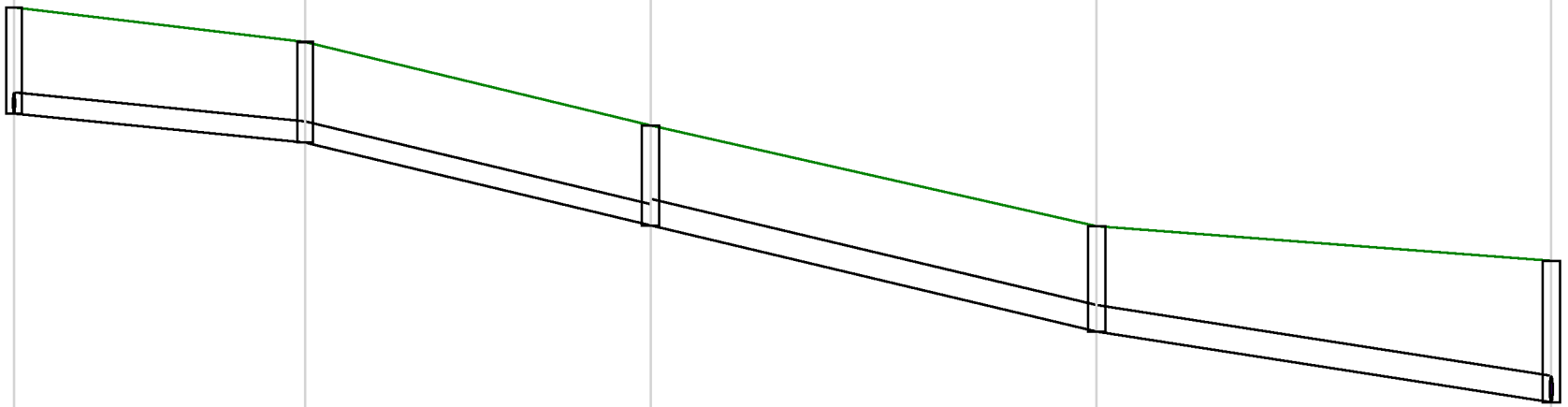

A4 drawing

Hor Scale 550
Ver Scale 100

Datum (m) 113.000

Node Name	F6		F7		F8		F9		F10
Link Name		4.000		4.001		4.002		4.003	
Section Type		300mm		300mm		375mm		375mm	
Slope (1:X)		55.2		23.0		23.1		35.4	
Cover Level (m)	123.580		123.092		121.913		120.685		120.000
Invert Level (m)	122.080		121.670	121.670	120.500	120.500	119.000	119.000	118.000
Length (m)		22.627		26.870		34.655		35.355	

Flow+ v12.0 Copyright © 1988-2025 Causeway Technologies Ltd

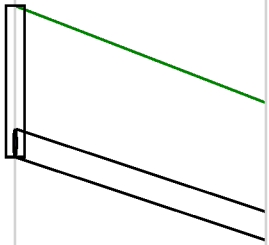

Node Name	F10	F11
A4 drawing Hor Scale 550 Ver Scale 100 Datum (m) 110.000		
Link Name	4.004	
Section Type	375mm	
Slope (1:X)	16.6	
Cover Level (m)	120.000	118.717
Invert Level (m)	118.000	116.900
Length (m)	18.248	

Flow+ v12.0 Copyright © 1988-2025 Causeway Technologies Ltd

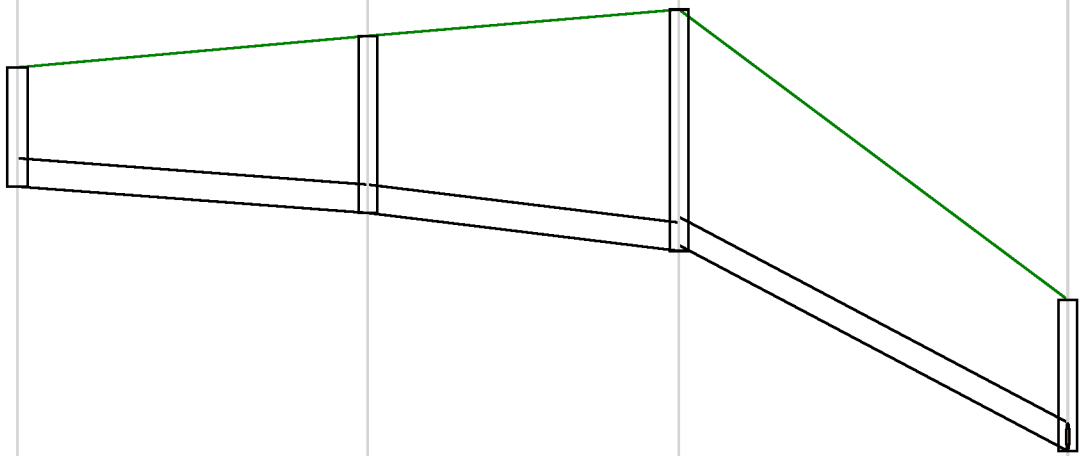

Node Name	S18		10		1		F10
		5.000		5.001		5.002	
Link Name							
Section Type		375mm		375mm		375mm	
Slope (1:X)		73.1		45.1		10.4	
Cover Level (m)	123.071		123.488		123.837		120.000
Invert Level (m)	121.496		121.147		120.695		118.000
		121.147		120.730			
Length (m)		25.495		22.633		28.276	

A4 drawing

Hor Scale 550
Ver Scale 100

Datum (m) 113.000

Flow+ v12.0 Copyright © 1988-2025 Causeway Technologies Ltd

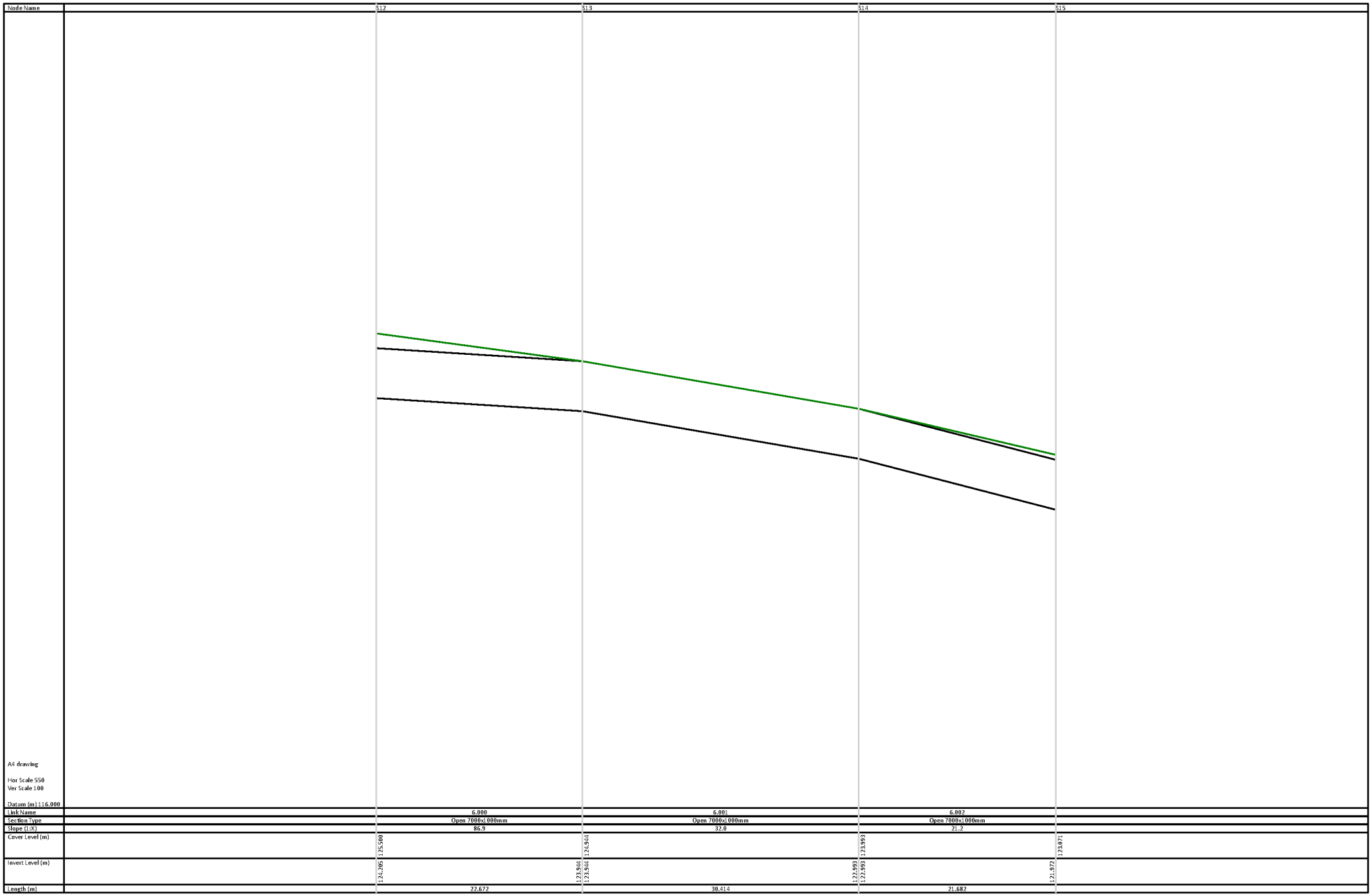

Link Name		6.000	6.001	6.002
Section Type		Open 7000x1000mm	Open 7000x1000mm	Open 7000x1000mm
Slope (1:X)		86.9	32.0	21.2
Cover Level (m)	125.500		124.964	123.993	123.071
Invert Level (m)	124.205		123.964	122.993	121.972
Length (m)		22.672	30.414	21.682

Flow+ v12.0 Copyright © 1988-2025 Causeway Technologies Ltd

Node Name	C8	C9
A4 drawing Hor Scale 550 Ver Scale 100 Datum (m) 105.000		
Link Name	7.000	
Section Type	450mm	
Slope (1:X)	28.6	
Cover Level (m)	114.700	114.650
Invert Level (m)	112.400	111.600
Length (m)	27.847	

Flow+ v12.0 Copyright © 1988-2025 Causeway Technologies Ltd

Node Name		C0	C1
A4 drawing Hor Scale 550 Ver Scale 100 Datum (m) 109.000			
Link Name		8.000	
Section Type		450mm	
Slope (1:X)		24.3	
Cover Level (m)		118.000	117.800
Invert Level (m)		116.400	115.600
Length (m)		19.416	

Flow+ v12.0 Copyright © 1988-2025 Causeway Technologies Ltd

Node Name		C4	C5
A4 drawing Hor Scale 550 Ver Scale 100 Datum (m) 107.000			
Link Name		9.000	
Section Type		375mm	
Slope (1:X)		22.1	
Cover Level (m)		116.000	115.544
Invert Level (m)		114.400	113.600
Length (m)		17.692	

Flow+ v12.0 Copyright © 1988-2025 Causeway Technologies Ltd

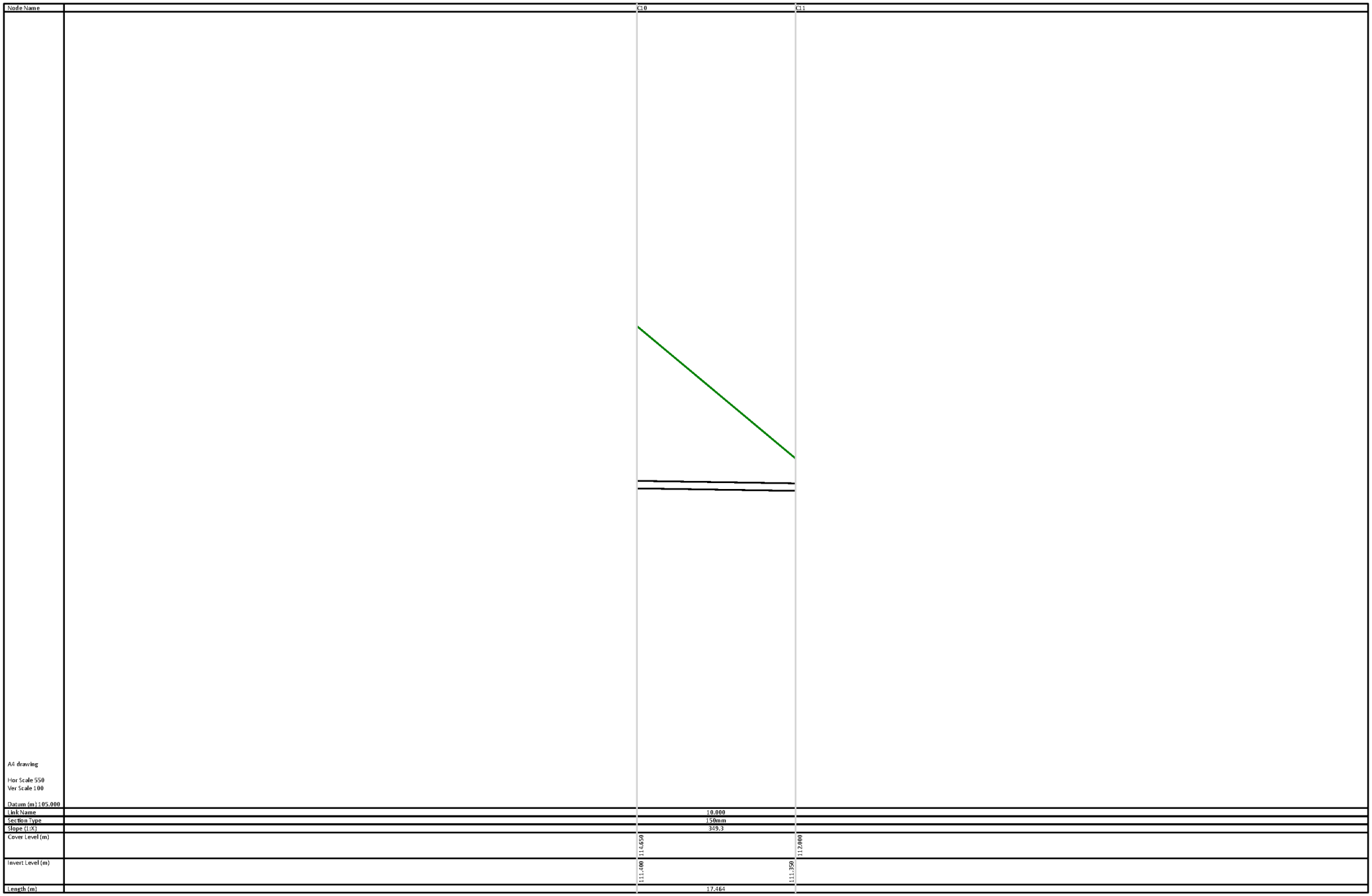

Flow+ v12.0 Copyright © 1988-2025 Causeway Technologies Ltd

Node Name	C6	C7
A4 drawing Hor Scale 550 Ver Scale 100 Datum (m) 106.000		
Link Name	11.000	
Section Type	375mm	
Slope (1:X)	21.2	
Cover Level (m)	115.000	114.700
Invert Level (m)	113.400	112.600
Length (m)	16.971	

Flow+ v12.0 Copyright © 1988-2025 Causeway Technologies Ltd

Node Name		C2	C3
A4 drawing Hor Scale 550 Ver Scale 100 Datum (m) 108.000			
Link Name		12.000	
Section Type		375mm	
Slope (1:X)		19.4	
Cover Level (m)		117.000	116.758
Invert Level (m)		115.400	114.600
Length (m)		15.556	

Flow+ v12.0 Copyright © 1988-2025 Causeway Technologies Ltd

Appendix E Construction Surface Water Management Plan

© Envireau Ltd. 2026 \ 3491675 Heatons Cadeby Pipe Factory Discharge of Conditions \ RPT DoC 10,11 & 12

Appendix F SuDS Maintenance Schedule

© Envireau Ltd. 2026 \ 3491675 Heatons Cadeby Pipe Factory Discharge of Conditions \ RPT DoC 10,11 & 12