

GATE ELEVATION

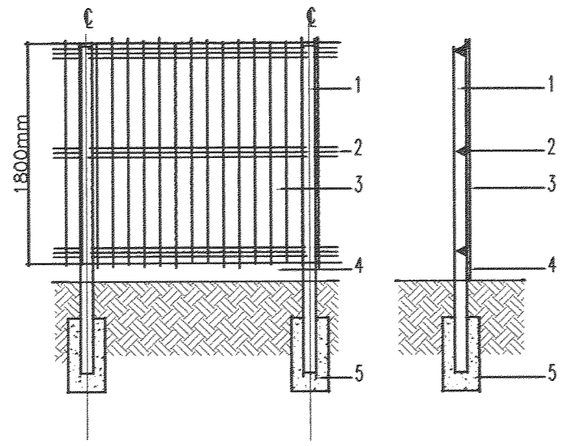

1. 100x100mm softwood posts
2. 75x75mm arris rails housed into posts
3. 150x25mm feather edged boarding
4. 150x25mm gravel board
5. Conc. foundations to Engineers Details
6. 50x100mm stiles, rails and braces
7. 3 nr. G.M.S. 450mm Tee hinges
8. 234x57mm suffolk latch
9. G.M.S. spring closer

Note:
All timber to be sawn softwood prepared to receive specified stain to approved finish

CLOSE BOARDED FENCE

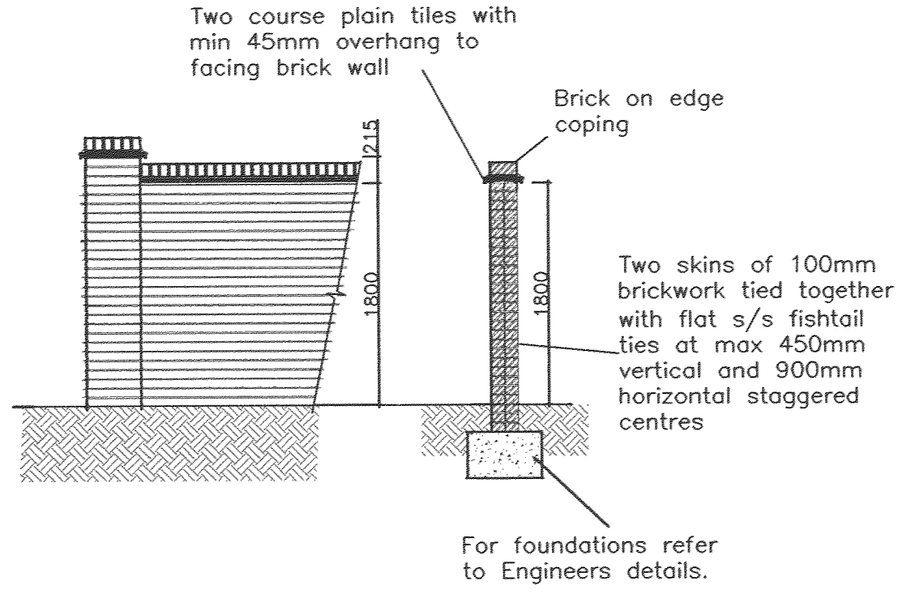

BRICKWORK SCREEN WALL

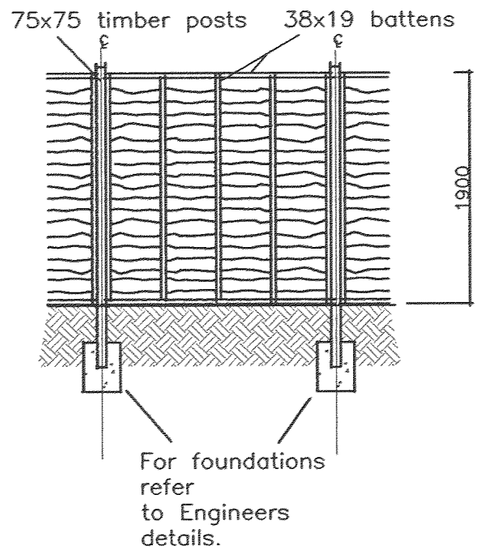

LARCH LAP PANEL FENCE

RECEIVED
DEVELOPMENT SERVICES
27 NOV 2008

THE DRAWING IS TO BE READ IN CONJUNCTION WITH ALL OTHER PROJECT DRAWINGS, CONSTRUCTION NOTES AND/OR PROJECT SPECIFICATION. ALL DISCREPANCIES SHOULD BE REPORTED IMMEDIATELY.

Rev.	Date	Details	Drawn

cadsquare
ARCHITECTURAL AND URBAN DESIGN
☐ Home Counties t: 01252 351080
☐ South East t: 01273 320960
☐ South West t: 0117 960 1408
☒ Midlands t: 01905 761580
www.cadsquare.co.uk

Site Address:	Description:
55 COWPER ROAD BURBAGE HINCKLEY LEICS	ENCLOSURE DETAILS

Drawing Number: 07-055/08

Date: Jan 2008 | Scale: 1:50 @ A2

Status: PLANNING

AutoCAD Reference: fences

Drawn: pnh | Checked: rdh

Client:

ASPECTS
...a better aspect of home building

THIS DRAWING IS THE COPYRIGHT OF CADSQUARE LTD AND MUST NOT BE USED IN CONJUNCTION WITH ANY OTHER PROJECT WITHOUT CADSQUARE LTD WRITTEN CONSENT