SCREEN WALL (FACING BRICK)

Coping to walls to be engineering quality contrasting brick on edge.
Walls to have 12mm wide expansion joints at 10.35m centres.

Brickwork up to minimum 150mm above ground level must be engineering quality (refer to external works layout drg no. 110 for brick types).

Foundations to be minimum 300mm below ground level to structural engineers details.

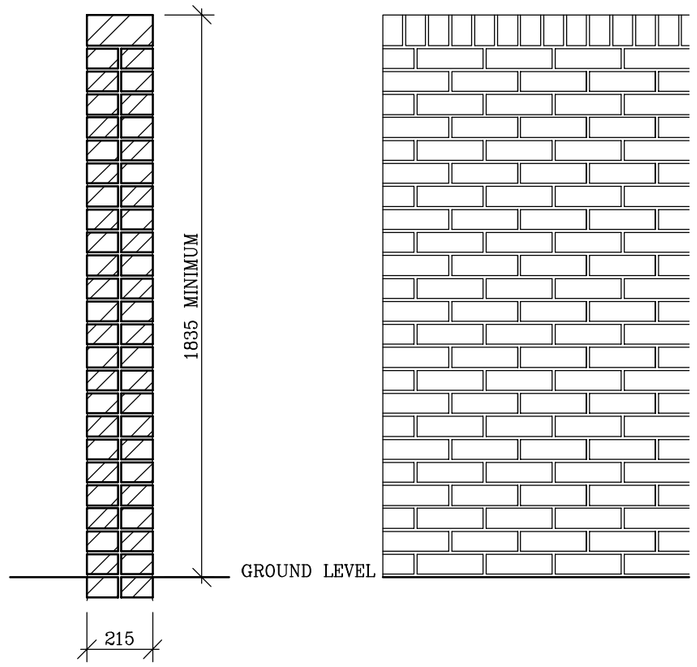

SECTION

ELEVATION

CLOSE BOARD GATE

All timber to be vacuum/pressure treated and finished with two coats brown stain.

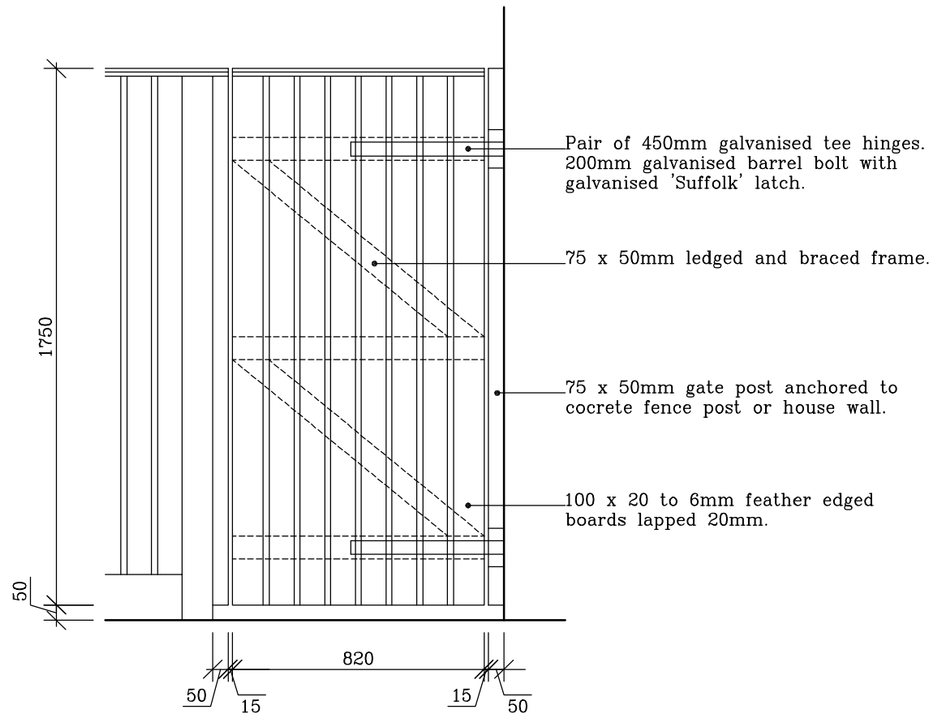

ELEVATION

CLOSE BOARD FENCE

All timber to be vacuum/pressure treated and finished with two coats brown stain.

Foundations to structural engineers design.

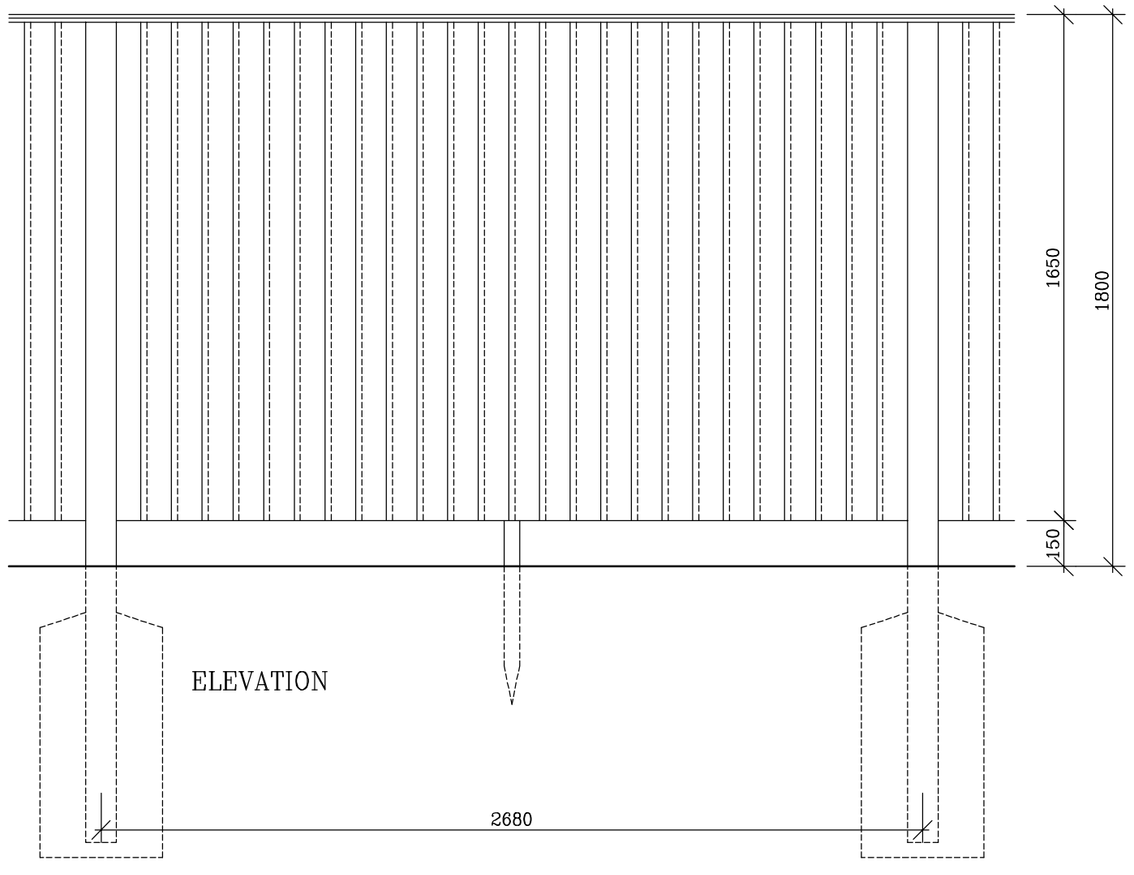

ELEVATION

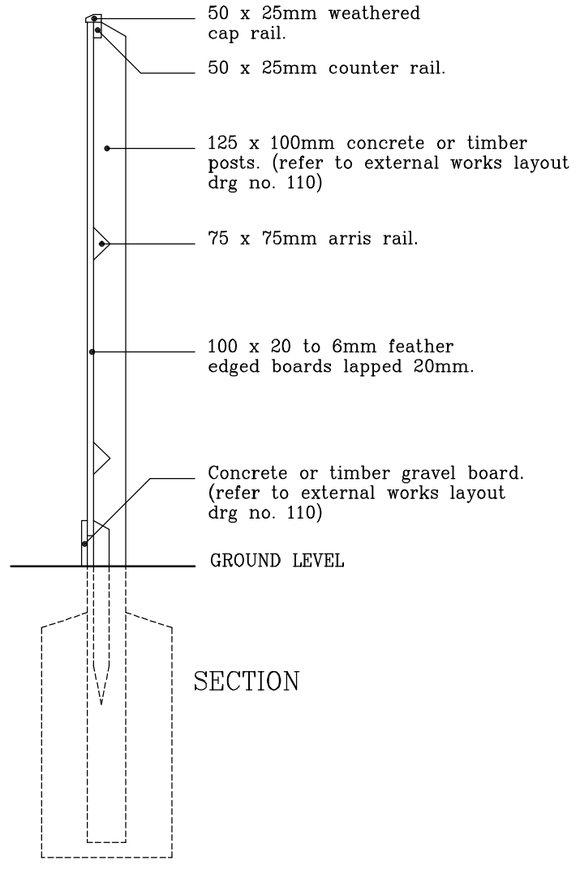

SECTION

0.9m HIGH RAILINGS

Railings constructed from 12mm dia. m.s. bar & 40 x 10mm m.s. flat, with 40 x 20mm m.s. flat posts at 1.8m c/c, with ragged ends set in concrete. All hot dipped galvanised & painted gloss black.

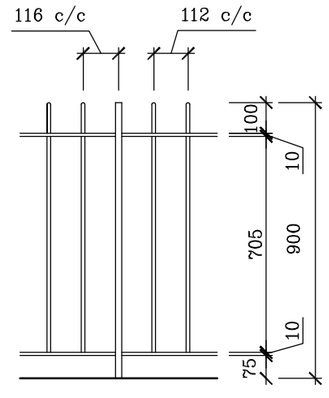

ELEVATION

The contractor is to check and verify all building and site dimensions, levels and sewer invert levels at connection points before work starts. The contractor is to comply in all respects with current building legislation – British Standard Specifications, Building Regulations etc. whether or not specifically stated on this drawing. Do not scale from this drawing.

Sheet Size A2

Rev	Date	Init

The NOBLE Consultancy
Architectural ■ Planning ■ Engineering ■ Landscaping
The Stables, Says Court Farm, Badminton Road
Frampton Cotterell, South Gloucestershire
BS36 2NY
T: 0870 3825033 F: 0870 3825088
E: nobleconsultancy@btconnect.com

client
BARRATT EAST MIDLANDS

project
HASWELL MEADOWS,
THE COMMON,
BARWELL.

drawing
WALL & FENCE DETAILS

job no.	drg no.	rev
816	54	–

scale	date	drawn
1:20	22-05-07	NJB

© This drawing and the building works depicted are the copyright of The Noble Consultancy Ltd. and may not be reproduced or amended except by written permission. No liability will be accepted for amendments made by other persons.