DISCONS

Notes:
1. This drawing is for 'Dimensional Information Only', It is essential that this drawing is read in conjunction with the 'Installation Guidelines' supplied with the unit. (Copies available from our sales department).
2. All Pipe connections are Ø 110.0mm PVCu.
3. All units require appropriate 'Cover' & 'Frame' to suit site loadings (standard cover supplied).
4. Blower assembly mounted externally, within 10m of treatment plant.
5. Isolator mounted close to treatment plant so power failure light is visible, wiring from isolator to be fed back to blower housing.

Unit Dimension Chart								
Unit	Dim 'A' (mm)	Dim 'B' (mm)	Dim 'C' (mm)	Dim 'D' (mm)	Dim 'E' (mm)	Dim 'F' (mm)	Dim 'G' (mm)	Unit Weight (Kgs)
E006G10AFP	1000	1100	1200	1100	2200	1850	500	250
E006G15AFP	1500	1600	1200	1100	2700	1850	500	270
E012G10AFP	1000	1100	1700	1600	2700	1850	500	275
E012G15AFP	1500	1600	1700	1600	3200	1850	500	295

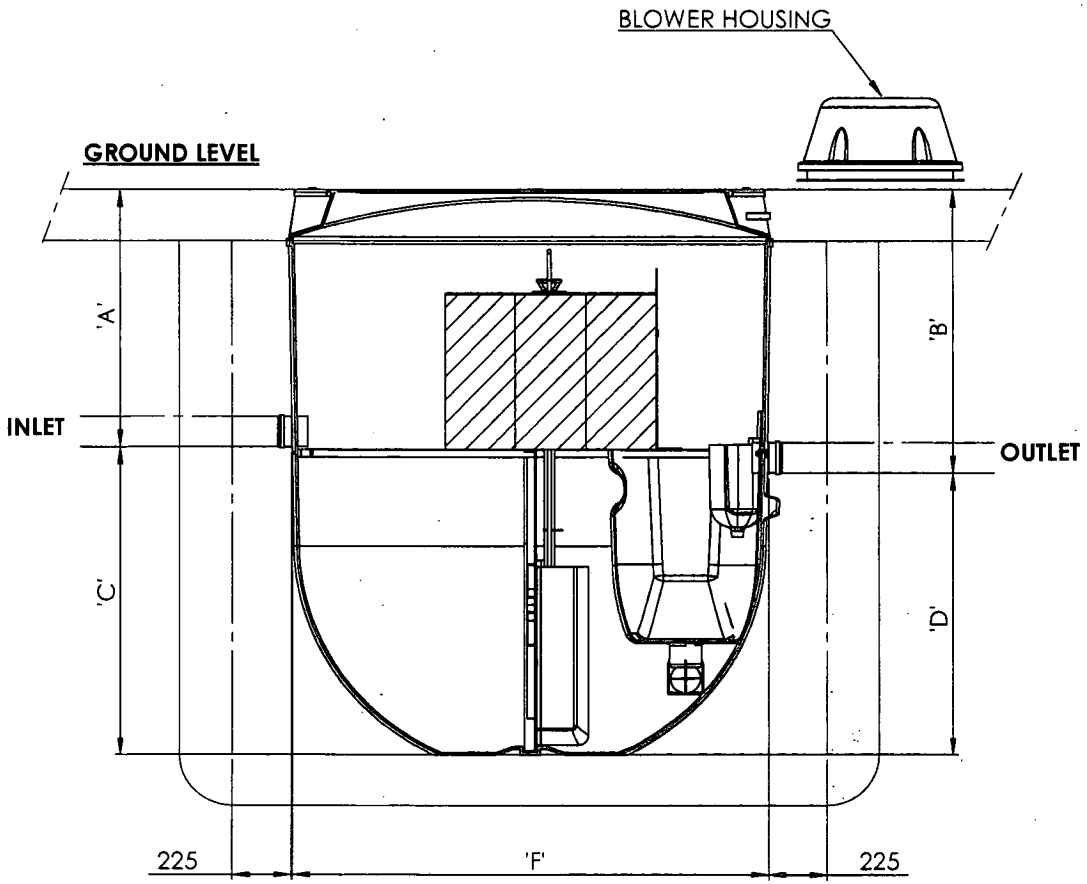

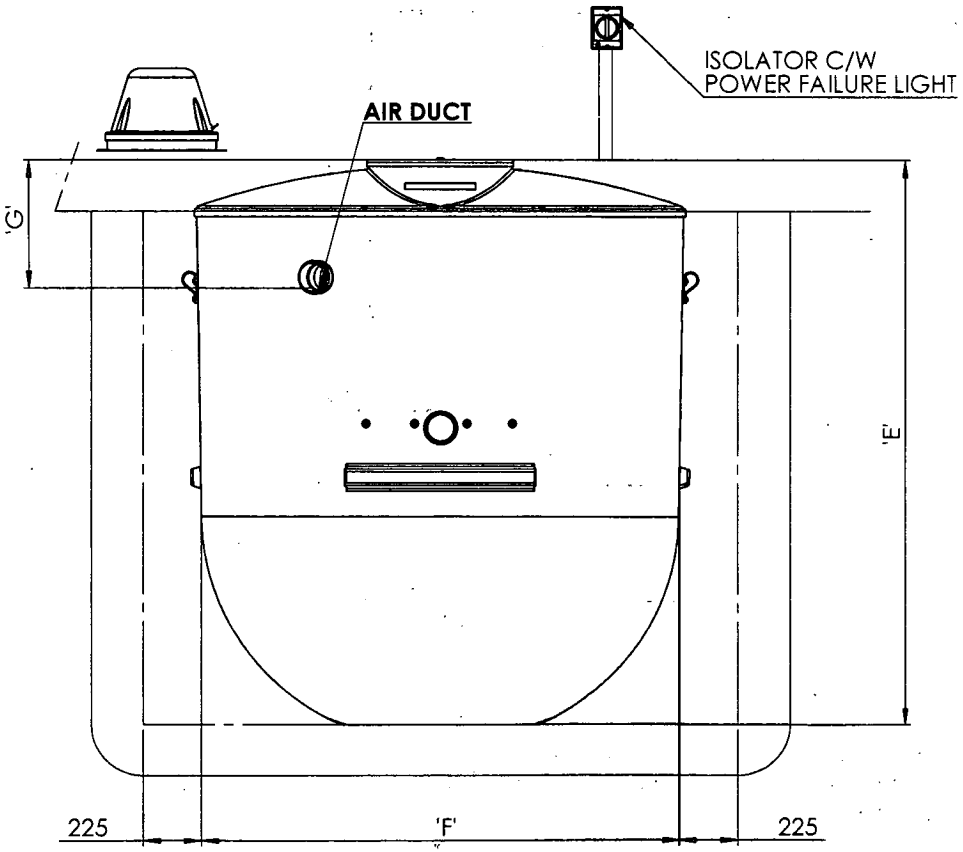

Please check with Kingspan Environmental that this drawing is the latest issue				
Issue	Date	Drawn by	Approved by	Description
02	11.10.10	J.McM		CC901 - Amend Weights
01	19.11.08	P.T.C		Initial Release

Material : Various
Finish :
Weight : See Table
Tolerance :
Thickness : n/a
Surface Area :

Drawing : DS0968P - E6 & E12 Gravity Page 1 of 1

E6 & E12 TREATMENT PLANTS (GRAVITY)

All dimensions in mm

Scale: Not to scale

Kingspan Environmental reserve theright to alter the details of this drawing without prior notice.This drawing is copyright and may not be reproduced or used withoutthe written permission of Kingspan Environmental.

Kingspan Environmental

X:\engineering\Drawing Data\02 - Sales Drawings\DS\DS - 09\DS0968P - E6 & E12 Gravity

DEVELOPMENT
SERVICES

16 JUN 2011

RECEIVED